PHILIP MORRIS USA INTER-OFFICE CORRESPONDENCE
120 PARK AVENUE, NEW YORK, NY 10017-5592

TO: Adrian Marrullier DATE: April 19, 1994

FROM: Shari Teitelbaum

SUBJECT: 1994 V Wear QualiVue -- Final Report

Attached are the findings from the QualiVue study recently completed on the 1994 V Wear mailing. Overall, the objective of the study was to understand consumer response to the 1994 V Wear program and to provide input for order quantities. Specific areas of interest were as follows: the relative appeal of the various items included in the collection, the brand and smoker imagery projected by the Catalog, and a comparison of the 1994 and 1993 V Wear Catalogs. We also examined consumer awareness and involvement with the Virginia Slims Club concept.

Methodology

Semi-structured, in-depth interviews were conducted among 179 female smokers who were aware of receiving the 1994 V Wear Catalog mailing. The sample was drawn from the Philip Morris Direct Mail Database and was representative of the mailing's demographic profile: all were female smokers, with 30% aged 21-34, 30% aged 35-44 and 40% aged 45-64; in terms of regular brand usage, 65% smoke Virginia Slims and the remaining 35% competitive 100/120's cigarettes. We also made sure that we spoke to at least 30 women who had responded to the 1993 Catalog.

This analysis is a synthesis of both closed-ended tabulations and open-ended responses.

Summary of Findings

As indicated in the Topline, overall response to the 1994 Catalog was very favorable. The 1994 V Wear Catalog was very effective in generating attention and involvement, with readership and interest in ordering significantly higher for the 1994 Catalog than for its 1993 counterpart. The Catalog also served to reinforce smokers' already positive perceptions of Virginia Slims imagery -- as a brand for sociable, modern, active, and stylish young adult women. These perceptions of the Catalog's orientation are consistent with what we hear expressed about the brand's image during qualitative research.

When rating the 1993 and 1994 Catalogs on a series of attributes, the one big difference between the two is that the 1994 Catalog is viewed as more upscale than the 1993 version. This is the result of the 1994 Catalog's unique, upscale styling and presentation. The "packaging" was described as classy, professional and tasteful, and thereby encouraged recipients to read it and enhanced the desirability of the merchandise. Both the 1993 and 1994 Catalogs were perceived to be trendy, for stylish women and for younger adult women. Neither Catalog is considered descriptive of older women.

2041883530

Source: https://www.industrydocuments.ucsf.edu/docs/xnxl0000

Consistent with findings from the 1993 QualiVue, the leather jacket helps set the quality, stylish, up-to-date tone for the Catalog. Furthermore, the lighter should once again be the most often ordered item, as it is both practical and attractive while requiring a low level of UPC's. Most of the other items were also well-regarded and stimulated the interest of the intended audience, with the exception of the floral scarf, choker kit, and tattoo kit. These results also bear out the findings from the qualitative research conducted on the collection in August 1993 in Baltimore.

In general, the merchandise appears to be more relevant to young adult smokers than to smokers over age 45. It is not surprising, then, that the most often recommended improvements for future Catalogs often involved offering a wider array of both styles and sizes -- which would be appropriate for older as well as young adult women.

Not surprisingly, Virginia Slims smokers have significantly higher interest in the Catalog than competitive smokers. However, the Catalog does appear to be able to generate some incremental purchasing among competitive smokers, as 38% of them indicate that they will buy Virginia Slims more frequently as a result of the V Wear Catalog.

Those who ordered from last year's Catalog are also disproportionately likely to order from the 1994 Catalog. This highlights smokers' satisfaction with the quality of the items they received last year.

Findings about the Slims Club are consistent with those described in the 1993 Direct Mail Research Final Report (March 9, 1994). Slightly less than half of the mailing recipients are aware of the Club, and of those, about two-thirds indicate that they are indeed members. Members of the Club exhibit a high degree of satisfaction with being a part of it and are appreciative of the fact that Virginia Slims recognizes them and cares about them. They clearly enjoy both its tangible advantages (coupons and free gifts), and, perhaps even more importantly, the intangible, emotional benefit of being recognized and appreciated as a smoker. Also consistent with previous research, there is some confusion about how one gets to be a member of the Slims Club.

Attachment

cc: D. Beran
J. Bonhomme
P. d'Albis (LBCo)
E. Franklin (LBCo)
E. Gee
K. Lalley (LBCo))
S. LeVan
C. Murray
D. Ryan (LBCo)
M. Valinoti

2041883531

Source: https://www.industrydocuments.ucsf.edu/docs/xnxl0000

PRESENTATION OUTLINE

- OBJECTIVES
- METHODOLOGY
- SUMMARY OF FINDINGS
- DETAILED FINDINGS
  - Reactions to the Mailing
    - Awareness of Mailing
    - Involvement with Catalog
    - Recall of Catalog Elements
  - The Items
  - Catalog Imagery
    - Comparisons to 1993 Catalog
    - Suggested Improvements
  - Smoker Imagery
  - Potential Impact of V-Wear Program on Purchase of Virginia Slims
  - Coupon Usage
    - Coupons From Catalog
    - General Usage of Coupons
  - The Virginia Slims Club
    - Awareness
    - Membership
    - Perceptions of The Club
    - Attitudes Toward The Club
- CONCLUSIONS AND IMPLICATIONS
- APPENDIX
    - Demographics and Composition of the Sample
    - Catalog Imagery

2041883532

Source: https://www.industrydocuments.ucsf.edu/docs/xnxl0000

Philip M[illegible] ; USA Continuity Promotions

K. Eisen-Marlboro
J. Bonhomme-Premium

Functional Area: Consumer Research Functional Responsibility: Program Development & Refinement Name: K. Miller-Discount Page No. 1

FUNCTIONAL IMPACT CHART

Inputs	*Source* →	*My Job* →	*Output*	*Distribution*
Brand & Purchasing & LBCO/Backer → description, elements, etc. (including desired program audience).	Custom consumer research--usually qualitative--with key consumer segments.	Describe scope of functional responsibility: When needed: - Obtain consumer input about program and elements (e.g. creative, catalog/items, execution/redemption mechanics). - Provide findings and implications for refinement of program/elements. Time needed to complete (in weeks): Qualitative: 4-8 weeks, depending on availability of stimulus materials. Quantitative: 6-10 weeks after receipt of materials.	Report	Brand Purchasing, Agency

204188353

Source: https://www.industrydocuments.ucsf.edu/docs/xnxl0000

K. Eisen-Marlboro
J. Bonhomme-Premium

Functional Area: Consumer Research *Functional Responsibility: Program Evaluation* *Name: K. Miller-Discount*

FUNCTIONAL IMPACT CHART

Inputs	***Source*** →	***My Job*** →	***Output***	***Distribution***
Brand, Agency, Purchasing	Custom consumer research, usually quantitative, with key consumer segments.	Describe scope of functional responsibility: When needed: Follow up research to: - track performance - obtain an early estimate of response to program/elements - obtain consumer feedback on the program/elements - provide input for refining/ developing future programs	Report/Presentation	Brand, Agency, MI&A, Purchasing
		Time needed to complete (in weeks): Varies depending on scope of project. May provide tracking data on an on-going basis and other feedback periodically. Usually need 2-4 weeks to set up, 2-4 weeks after interviewing for report.		

2041883534

Source: https://www.industrydocuments.ucsf.edu/docs/xnxl0000

Purchasing

2041883537

Source: https://www.industrydocuments.ucsf.edu/docs/xnxl0000

Philip Morris USA Continuity Promotions

Functional Area: Purchasing *Functional Responsibility: Purchasing Manager* *Name: John Trojanowski* *Page No. 3*

FUNCTIONAL IMPACT CHART

Inputs	*Source* →	*My Job* →	*Output*	*Distribution*
Requirements	Research	Describe scope of functional responsibility: Utilized to develop bid requests and pricing	Bid Request	Vendor(s) quoting
			Est. Price	Brand
		Time needed to complete (in weeks): Bid request 1 - 2 weeks after all info available		

2041883536

Source: https://www.industrydocuments.ucsf.edu/docs/xnxl0000

Philip Morris USA Continuity Promotions

Functional Area: Purchasing *Functional Responsibility: Purchasing Manager* *Name: John Trojanowski* *Page No. 4*

FUNCTIONAL IMPACT CHART

Inputs	*Source* →	*My Job* →	*Output*	*Distribution*
Final item selection	Brand	Describe scope of functional responsibility: Require final item selection to allow development of specs for RFQ	OK to develop final specifications	Vendor with bid package
		Time needed to complete (in weeks): 2 - 4 weeks		

2041883537

Source: https://www.industrydocuments.ucsf.edu/docs/xnxl0000

FUNCTIONAL IMPACT CHART

Inputs	*Source* →	*My Job* →	*Output*	*Distribution*
Specifications	Development supplier	Describe scope of functional responsibility: Include in bid package	Bid request	Vendors quoting
		Time needed to complete (in weeks): 2 - 4 weeks		

2041883538

Source: https://www.industrydocuments.ucsf.edu/docs/xnxl0000

Philip Morris USA Continuity Promotions

Functional Area: Purchasing *Functional Responsibility: Purchasing Manager* *Name: John Trojanowski* *Page No. 6*

FUNCTIONAL IMPACT CHART

Inputs	*Source* →	*My Job* →	*Output*	*Distribution*
Quotations (sealed bids)	Suppliers	Describe scope of functional responsibility: Open bids with Finance Enter on bid form	Buying recommendation	Management for approval
		Time needed to complete (in weeks): 1 week		

20418835 39

Source: https://www.industrydocuments.ucsf.edu/docs/xnxl0000

FUNCTIONAL IMPACT CHART

Inputs	*Source* →	*My Job* →	*Output*	*Distribution*
Shipping schedule	Vendor	Describe scope of functional responsibility: Needed to enter req. into system and issue P.O.	P.O.	Vendor
		Time needed to complete (in weeks): 3 - 7 days 1 week		

2041883540

Source: https://www.industrydocuments.ucsf.edu/docs/xnxl0000

FUNCTIONAL IMPACT CHART

Inputs	*Source* →	*My Job* →	*Output*	*Distribution*
Requisition	Buyer	Describe scope of functional responsibility: Circulate for approval by Brand, Finance, Purchasing	Purchase order	Vendor
		Time needed to complete (in weeks): 1 - 4 days		

2041883541

Source: https://www.industrydocuments.ucsf.edu/docs/xnxl0000

TIMELINES

"How Long Does It Take To Get A Keychain??????"

The Importance of Long-Range Planning to Support the Process

2041883542

Source: https://www.industrydocuments.ucsf.edu/docs/xnxl0000

Incentive Time Line

2041883543

Items	</>	Quantity (000's)	Creative Develop. (Weeks)	Bid (Weeks)	Issue PO (Weeks)	PreProd Samples (Weeks)	Adjstmnts to Sample (Weeks)	QC Standards (Weeks)	Production (Weeks)		Total Number of weeks	Wkly. Prod Rate (000's)
Apparel:												
Caps	>	2500	6	3	1	1	2	1	20		34	156
Sweats	>	750	6	3	1	1	2	1	20		34	47
T Shirts	>	1000	6	3	1	1	2	1	8		22	250
Auto Accessories:												
Tire Gauge	<	400	6	3	1	1	2	1	17	*	31	31
Bar Accessories:												
Plastic Ashtray	>	500	6	3	1	1	2	1	14	*	28	50
Lighters:												
Djeep	>	1000	3	3	1	1	2	1	6	*	17	500
Scripto	>	1000	3	3	1	1	2	1	8	*	19	250
Specialty	>	1000	6	3	1	1	2	1	18	*	32	71
Sports Accesories:												
Flashlights	>	500	6	3	1	1	2	1	11	*	25	71
Sunglasses	>	500	6	3	1	1	2	1	14	*	28	50
Umbrellas	>	400	6	3	1	1	2	1	24	*	38	20
Watches	>	500	6	3	1	1	2	1	17	*	31	35

Note: One Factory location....."Production" allows for 4 wks. offshore delivery on items marked (*)

Frances Goehl June 3,1994

Source: https://www.industrydocuments.ucsf.edu/docs/xnxl0000

BID REQUEST
Request for Quotation

Step 1

2041883544

Source: https://www.industrydocuments.ucsf.edu/docs/xnxl0000

PHILIP MORRIS
INCORPORATED
120 PARK AVE., NEW YORK, N.Y. 10017

rec'd 4/26 P.M.

Request for Quotation

Sample due by 5/18

Macy Product Development
11 Penn Plaza
New York, NY 10001
ATTN: Mary Ott Tel: (212) 494-6360

PLEASE QUOTE ON THIS SHEET IN SPACES INDICATED BELOW FOR THE ARTICLES DESCRIBED.
NOTE DELIVERY REQUIRED AND IN QUOTING, ADVISE DEFINITE DELIVERY.
BASE YOUR QUOTATIONS ON THE TERMS AND CONDITIONS PRINTED AND/OR TYPED HEREON.

WE QUOTE YOU AS BELOW

NAME OF COMPANY: R.H. Macy Product Development
BY (SIGNATURE): X
OFFICIAL TITLE: Chairman
QUOTATION DATE: 5/12/94

QUANTITY	DESCRIPTION	UNIT PRICE	AMOUNT
6,400 - 12,800 pieces	PLEASE SUBMIT A COMPLETED QUOTATION USING THIS FORM, BASED ON THE ATTACHED SPECIFICATIONS. ONE SET OF YOUR QUOTATION MUST BE SENT IN A SEPARATE ENVELOPE, SEALED AND CLEARLY MARKED: "SEALED QUOTATION: Merit Leather Duffel PROMOTION" TO THE ATTENTION OF EACH OF THE PERSONS LISTED BELOW: Vincent Occhiuto - 7th Flr. PM-USA PURCHASING Doug Werth PM-USA ACCOUNTING ENVELOPES MUST BE RECEIVED BY MAIL OR HAND BY PHILIP MORRIS USA AT THE ABOVE ADDRESS NO LATER THAN NOON ON THE ABOVE DATE. REQUESTED SAMPLE(S) SHOULD BE SENT IN SEALED PACKAGES ONLY TO THE PURCHASING DEPARTMENT INDIVIDUAL. PLEASE DIRECT ANY QUESTIONS CONCERNING THIS BID TO Elfar or Victoria Strychack - 7th Flr., BEFORE THE DUE DATE. PLEASE HOLD YOUR CALLS CONCERNING THE STATUS OF THIS BID; YOU WILL BE CONTACTED WHEN A DECISION IS MADE.	$22.25	

for approx - estd.

[redacted]

2041883545

Buyer

REASON ORDER PLACED WITH SUCCESSFUL VENDOR | OTHER REASONS

Lowest Price ☐ Quality ☐ Prior Dev. ☐ Delivery ☐ Prior Service ☐ Best Design ☐

Source: https://www.industrydocuments.ucsf.edu/docs/xnxl0000

MERIT LEATHER DUFFLE 1.

GENERAL DESCRIPTION:

A MEDIUM SIZED PIGSKIN NAPPA DUFFLE BAG, WITH A SINGLE ZIPPER MAIN COMPARTMENT OPENING. ONE END POCKET WITH TOP OPENING ZIPPER ACCESS. SIDE ZIPPER OPENING ENVELOPE POCKET. INTEGRATED CARRY HANDLES OF PIGSKIN REINFORCED WITH HEAVY NYLON ROPING. ADJUSTABLE PIGSKIN SHOULDER STRAP THAT IS REMOVEABLE USING DOGLEASH SNAPS. FULLY LINED WITH POLYESTER TWILL.

- OVERALL SIZE IS 20"LONG X 8"WIDE X 10"HIGH
- CARRY HANDLES FEATURE A HOOK AND LOOP PADDED LEATHER HAND GRIP.
- OPEN CELL FOAM PADDED LEATHER SHOULDER PAD ON ADJUSTABLE REMOVEABLE SHOULDER STRAP. FOAM IS 10MM THICK
- ANTIQUE BRASS ZIPPERS USED THROUGHOUT WITH ANTIQUE BRASS SLIDERS AND HEADERS
- INTEGRATED RIGID BOTTOM OF PVC SHEET 3.0 MM THICK ,COVERED WITH POLYESTER TWILL LINING.
- FIVE ANTIQUE BRASS FEET RIVETED TO THE BOTTOM OF THE BAG.
- LEFT SIDE END POCKET FEATURES AN INTERIOR "WET POCKET" OF 210 T NYLON (120 X 90, 80x80) WITH PU COATING. END PANEL RT. SIDE HAS INTEGRATED ENVELOPE POCKETS
- LEATHER PIPING ON END SEAMS

CONSTRUCTION DETAILS AND COMPONENTS:

OUTER SHELL:	PIGSKIN NAPPA SKIVED TO 1.2 TO 1.4 MM THICK. DIED TO MATCH COLOR SPECIFICATIONS.
INTERIOR LINING	100% POLYESTER TWILL LINING 5.5 TO 6.0 OZ PER SQUARE YARD DYED TO MATCH COLOR SPECIFICATIONS.
LOGO	EMBOSSED PIGSKIN PATCH 3"LONG X 1.5" WIDE SEWN ON

(also recommendation acceptable + provide large swatch

2041883546

Source: https://www.industrydocuments.ucsf.edu/docs/xnxl0000

CONSTRUCTION DETAILS AND COMPONENTS (CONT'D):

LOGO cont'd:	TO SIDE OF BAG, CENTERED, MERIT LOGO AND RHOMBOID
ZIPPERS:	ANTIQUE BRASS ZIPPER TEETH.
	ZIPPER TAPE DYED TO MATCH COLOR SPECIFICATIONS.
	ANTIQUE BRASS FINISH METAL SLIDERS AND PULLS.
	SIZE: #5 YKK OR EQUIVALENT QUALITY.
PIPING:	PVC PIPING 4 0MM THICK COVERED WITH PIGSKIN NAPPA.
HARDWARE:	ALL METAL ANTIQUE BRASS FINISHED D RINGS, LUGGAGE
	FEET, AND HANDLE ATTACHMENT RINGS.
THREADS:	NYLON THREAD USED THROUGHOUT DYED TO MATCH
	COMPONENTS BEING SEWN.

COLOR SPECIFICATIONS:

MERIT BROWN:	CLOSE TO PMS 154U OR AS SAMPLE SUBMITTED.
	ALL PIGSKIN NAPPA, AND POLYESTER LININGS AND
	NYLON LINING AND ZIPPER TAPE.

HANGTAG SPECIFICATIONS:

HANGTAG TO BE AFFIXED WITH THE SWIFT TAG PLASTIC ATTACHMENT LOOP METHOD TO CARRY HANDLE. HANG TAG TO BE SUPPLIED BY MERIT.

PACKING SPECIFICATIONS:

EACH BAG IS PACKED WITHIN A POLYBAG 1 MIL THICK TAPED SEALED. FOLLOWING INFORMATION MUST APPEAR ON THE OUTSIDE OF THE POLYBAG:

STYLE#	*RN#*
P.O #	*COUNTRY OF ORIGIN:*

WARNING

PLASTICPAGS CAN BE DANGEROUS. TO AVOID DANGER OF SUFFOCATION, KEEP THIS WRAPPER AWAY FROM BABIES AND CHILDREN

2041883547

Source: https://www.industrydocuments.ucsf.edu/docs/xnxl0000

PACKING SPECIFICATIONS (CONT'D):

PACKING: 12 PIECES PER CARTON.

MASTER CARTON SIZE: 2.4 CUBIC FEET (ESTIMATED)

MASTER CARTON WEIGHT: 16 KGS (ESTIMATED)

*SILICA PACKAGE PLACED IN MAIN COMPARTMENT SECTION OF EACH BAG.

2041883548

Source: https://www.industrydocuments.ucsf.edu/docs/xnxl0000

MERIT LEATHER DUFFLE
BID PACKAGE - TERMS AND CONDITIONS

Freight Terms -

- *Off shore* items: CIF Duty Paid to POE BALTIMORE (Insurance Coverage Door to Door) - Third Party Billing POE to Final Destination
  + NOTE: Offshore vendors must provide 48 hr. advance shipment clearance notification to PM USA Transportation Dept. FAX - (212) 880-3112 - for PM carrier assignment to transport goods from POE to Final Destination. Failure to comply will result in vendor being assessed with any incremental freight charges incurred by PM USA.
- *Domestic* items: FOB Destination, Freight Collect - Third Party Billing
  + NOTE: Purchasing will provide Vendors with PM USA Transportation Routing Guide. Failure to comply will result in Vendor being assessed with any incremental freight charges incurred by PM USA.
- *Off-shore and Domestic* items: Vendors will be responsible for providing incoming production and/or shipment schedule to PM USA Purchasing and Transportation Departments.

Payment Terms -

- No Letters of Credit
- Terms will be 1/10/30 (1% 10 days; Net 30 days)
- Invoices will be paid based on quantity and quality verifications performed at Fulfillment Center.
- Payment will be made at receipt of invoices at PM USA Accounts Payable, New York with receipt verification of goods at Fulfillment Center.
- Payment timing begins at receipt of invoice in Accounts Payable or receipt of goods at Fulfillment Center whichever is later.

Quality / Quantity -

- Quotations must be per the attached specifications.
- An outline of quality control procedures to be used at production factories will be required with the bid.
- PM USA reserves the right to monitor vendors' quality control through an independent Quality Assurance Agent.
- PM (or its representative testing agency) reserves the right to pre-inspect and approve each plant and to spot check during production.
- PM Quality Assurance Agent will issue a certificate of inspection for all off-shore shipments.
- Bar Codes *may* be required for incoming cases. Vendor will advise capabilities with bid package.
- Case count for each item must be consistent. Vendor will advise packing factor.
- Vendor will not mix items and/or sizes within a case.
- Case marking must be per specifications to be included in purchase order.
- All invoices, packing slips, and bills of lading *must* reference.
  + Purchase Order number.
  + POS Number
  + Line Number (from P O)

Pricing / Vendor Selection -

- PM USA reserves the right to have single or multiple vendors on any or all items.
- Offshore vendors *must* have at least two factories qualified to manufacture each item.
- Bidders *must* provide the following for each item
  + Country of origin.
  + Specific producing plant(s) and addresses for each plant. (for PM USA quality audit purposes)
  + Capacity (available to PM USA) of each plant in number of pieces per day, per week, per month.
- Vendors are encouraged to quote on Domestic and/or Off Shore production.
- Prices will be fixed for the duration of the program Pricing to be fixed from 5/1/94 through 8/1/95.
- Vendors should base bids on <u>total forecast quantity</u> Please advise min. reorder quantity necessary.
- Vendors are encouraged to provide rebates based on quantities above those shown in 10% increments, i.e.. 110%, 120%, 130....up to 200%. Rebates should be retroactive to cover entire quantity; i.e., not apply on to incremental quantity.
- PM USA will commit to purchasing 30% of total forecast quantity for the initial order.

2041883549

Source: https://www.industrydocuments.ucsf.edu/docs/xnxl0000

Delivery Schedule

- Initial deliveries are desired at Fulfillment Center by 8/1/94. If delivery cannot start by that date, indicate start date (assume you will receive a P.O 2 weeks from bid due date.)
- Offshore vendors must provide anticipated date production will be booked.
- Vendors must provide delivery schedule for the initial 30% of the estimated volume.

Samples

- Bids must include samples representative for quality, material, design and size(one of each size). PM samples must be returned.

Negotiation

- In the course of this bid, Philip Morris USA will exercise its option to negotiate total cost - to include consideration of price, delivery and quality.

Terms & Conditions

- Vendors *must* acknowledge receipt of and agree, in writing BELOW, to accept these terms and conditions as well as those on the reverse side of the purchase order document.

_____ _____

Company Name Date

_____

Signature Title

2041883550

Source: https://www.industrydocuments.ucsf.edu/docs/xnxl0000

SIDE VIEW.

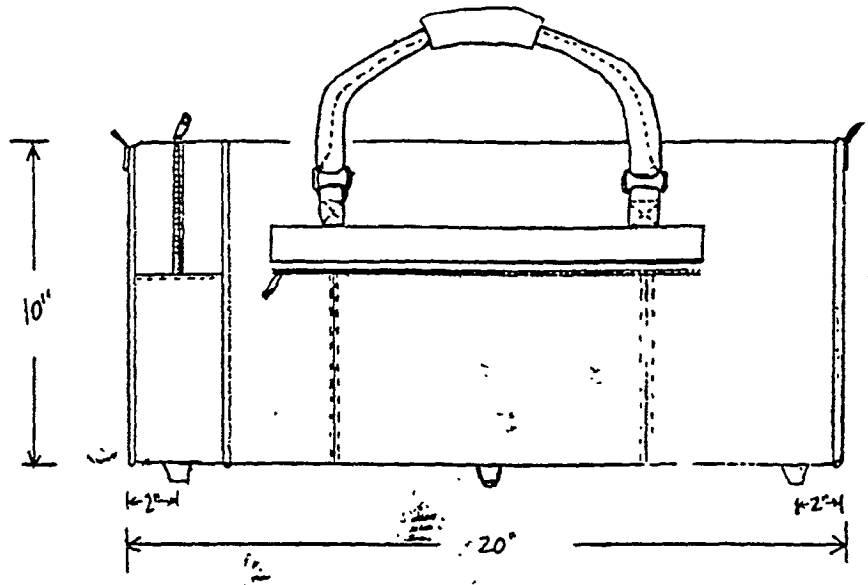

LEFT END.

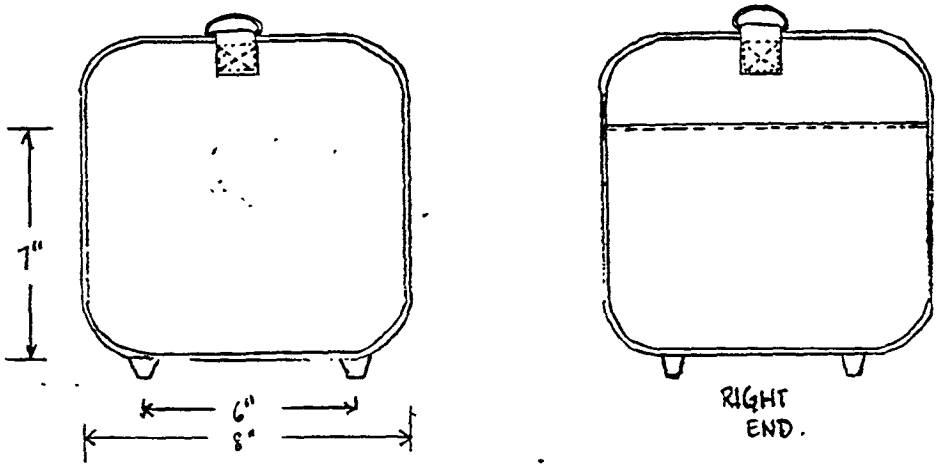

RIGHT END.

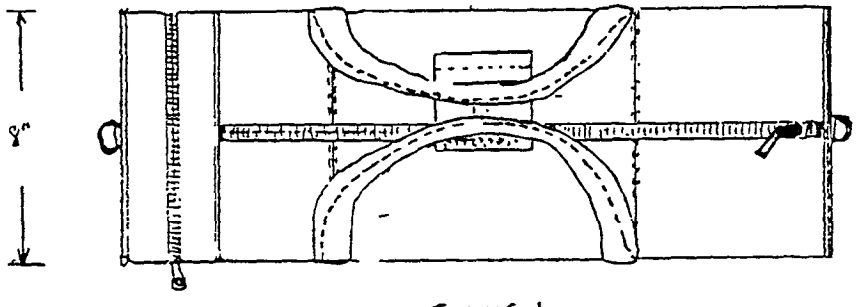

TOP VIEW

2041883551

Source: https://www.industrydocuments.ucsf.edu/docs/xnxl0000

BOTTOM VIEW

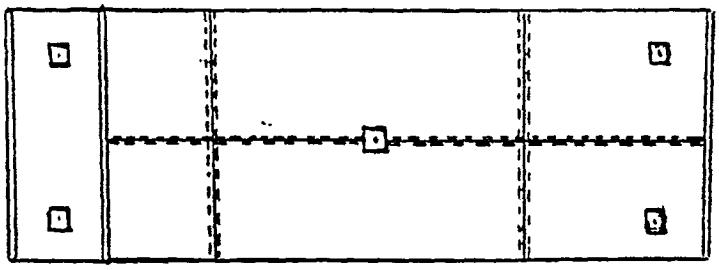

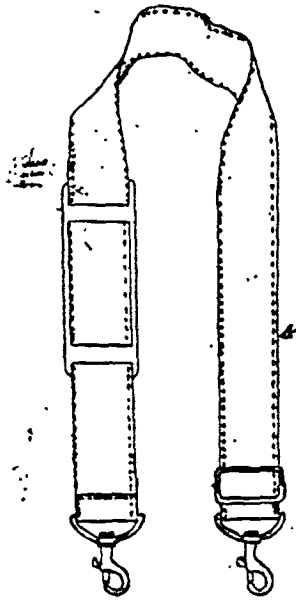

SINGLE NEEDLE STITCHING, CREATES DOUBLE SIDED SHOULDER STRAP.

FULLY EXTENDED LENGTH IS 48" FROM END OF SNAP TO END OF SNAP.

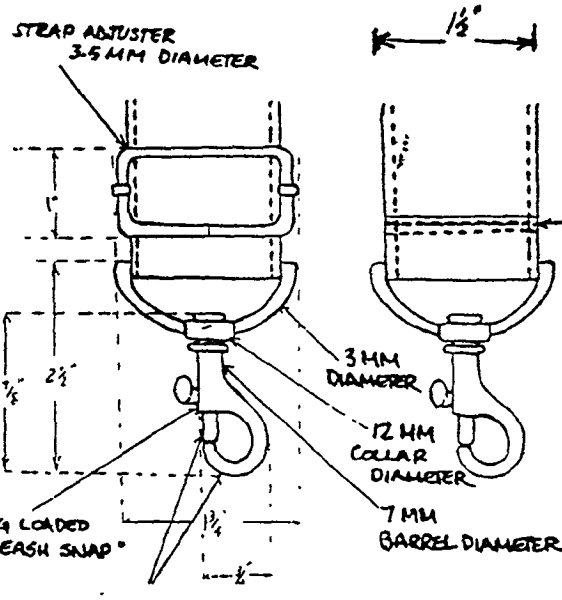

2041883552

Source: https://www.industrydocuments.ucsf.edu/docs/xnxl0000

2041883553

front

back

Source: https://www.industrydocuments.ucsf.edu/docs/xnxl0000

BID RESPONSE
Winning Vendor's Response to PM-USA Specifications

Step 2

2041883554

Source: https://www.industrydocuments.ucsf.edu/docs/xnxl0000

Macy Product Development

ELEVEN PENN PLAZA • NEW YORK, N.Y. 10001-2006

May 12, 1994

Vince Occhiuto
Philip Morris, Inc.
USA Purchasing
120 Park Avenue
New York, New York 10017

Dear Vince:

Enclosed please find, for your consideration, completed bid sheet for "Merit Leather Duffle." Unit price is based on your exact specifications as per your RFQ packet dated 4/21. Minimum reorder quantity is 2400 pieces.

We can offer you a 1% rebate per 10% incremental increase in quantity with a cap of 5% as follows:

Quantity to 12,800	Price as Quoted
from 12,801 - 14,080	1% rebate
from 14,081 - 15,360	2% rebate
from 15,361 - 16,640	3% rebate
from 16,641 - 17,920	4% rebate
above 17,921	5% rebate

To enhance your product offering, we are also offering at no additional cost, a Merit logo water bottle to accompany the duffle.

We can deliver to your fulfillment center by 9/25, based on order confirmation by 5/20 and color approval by 6/10. Requested sample of bag and proposed water bottle will be delivered to your office on 5/18 as specified in your RFQ sheet. Please note it will be black pig skin due to short lead time. Sample of brown leather will be delivered by 6/10, based on order confirmation by 5/20.

Jay Carothers, Vice-Chairman of Macy Product Development will be meeting with your respective financial/contract personnel on Wednesday, May 18th to review all terms and conditions, therefore I have not enclosed factory name/address in this packet.

2041883555

Source: https://www.industrydocuments.ucsf.edu/docs/xnxl0000

Upon order confirmation, a weekly production calendar will be submitted to your office. Approximate daily capacity of factory is between 2,000 pcs. per day. Country of origin is China.

Please feel free to call me at (212) 494-6360 if you have any questions regarding the enclosed. Look forward to establishing a mutually beneficial relationship with Philip Morris USA.

Sincerely,

Mary Ott
Merchandise Vice President

CC: K. Bunte
D. Elfar
S. Lizza
D. Werth
Richard Crystal
Jay Carothers

2041883556

Source: https://www.industrydocuments.ucsf.edu/docs/xnxl0000

Macy's info

MERIT DUFFEL

FACTORY: Cherrilite Co. Ltd.
72-80 Hui Yuen Rd
Kwun Hung

- Order by 5/20
- Actual brown full complete sample to New York by 6/10 - 6/15. Final sample process to begin on 5/20 with order confirmation. (5 days to color skin, 5 days to make complete sample, 5 days to ship to New York and approve).
- Skin cut by 6/24
- 4300 pieces (20' container) by 7/12 (8-1)
- Trucked to port by 7/15
- Approximate eta to fulfillment center 8/9
- Second 8,600 pieces available by 7/28 (40' container)
- Trucked to port for 7/30
- Approximate eta to fulfillment center 8/24

- Single line factory capacity 5800 bags per week
- Plan for Merit Duffel 3000 bags per week + or - as necessary
- 25 work days or 4.3 weeks to produce 12,000 duffels
- Mechanical for logo embossing will be needed upon order confirmation
- Hang tags supplied by Merit by 6/15

This schedule is based on order confirmation by 5/20. If the order is received one week later than 5/20, the schedule will be pushed back one week if we receive the order two weeks later than 5/20, the schedule will be pushed back two week, and so on.

2041883557

Source: https://www.industrydocuments.ucsf.edu/docs/xnxl0000

FINAL PRODUCTION SPEC
Prepared by Winning Vendor to Use in QA Set-up & Final Evaluation of Bid Award

Step 3

2041883558

Source: https://www.industrydocuments.ucsf.edu/docs/xnxl0000

Macy Product Development

Style #: **DUFFEL BAG**

TECHNICAL REPORT

Season:	Fall 1994	Dept:	Philip Morris/Merit	Page	1 of 8
Style #:	DUFFEL BAG	Item:	Medium Duffel Bag	Report Date:	June 08 1994
Design #:	PM-01	Fabric:	Napa Pigskin Leather	Report #:	PM0601.1
Size Range:	1 size	Vendor:	Alvin	In Store:	
Block Ref:		Country:	China P.A./P.O.:	Ship Date:	

Market Rep:		Local Office:		Appr. Status:	NOT APPROVED
Tech Dsgnr:	Frank Rubacky	Quota Ctgry:		Samp Reqmt:	C/Sample For Color
Prod. Mgr:	Lisa Carson	Ctry Origin:	China	Body Type Sent:	

Sketch: C:\FTCOLOR\DUFBGFT.TIF

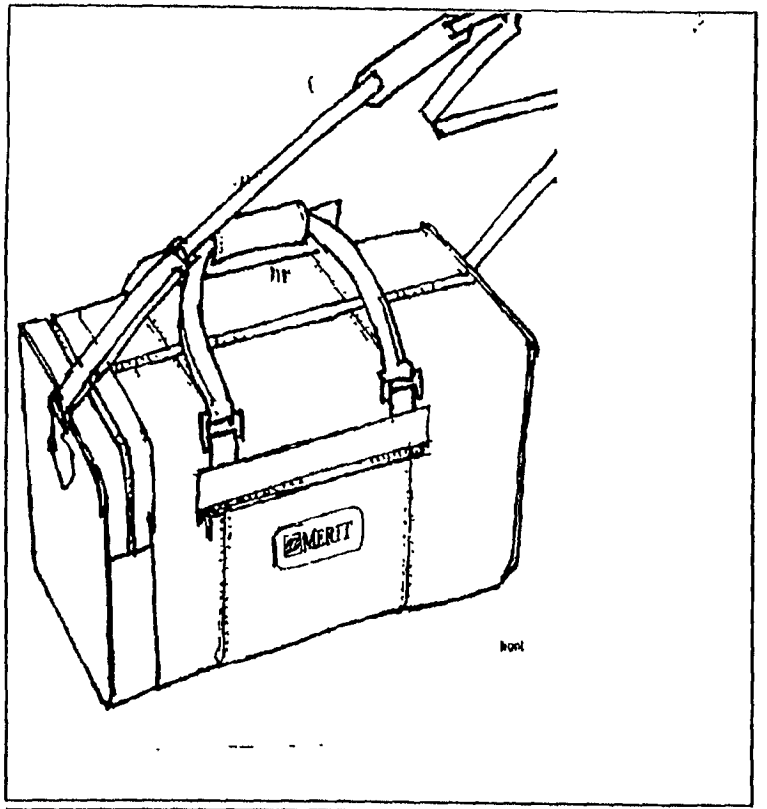

Sketch: C:\FTCOLOR\DUFBGBK.TIF

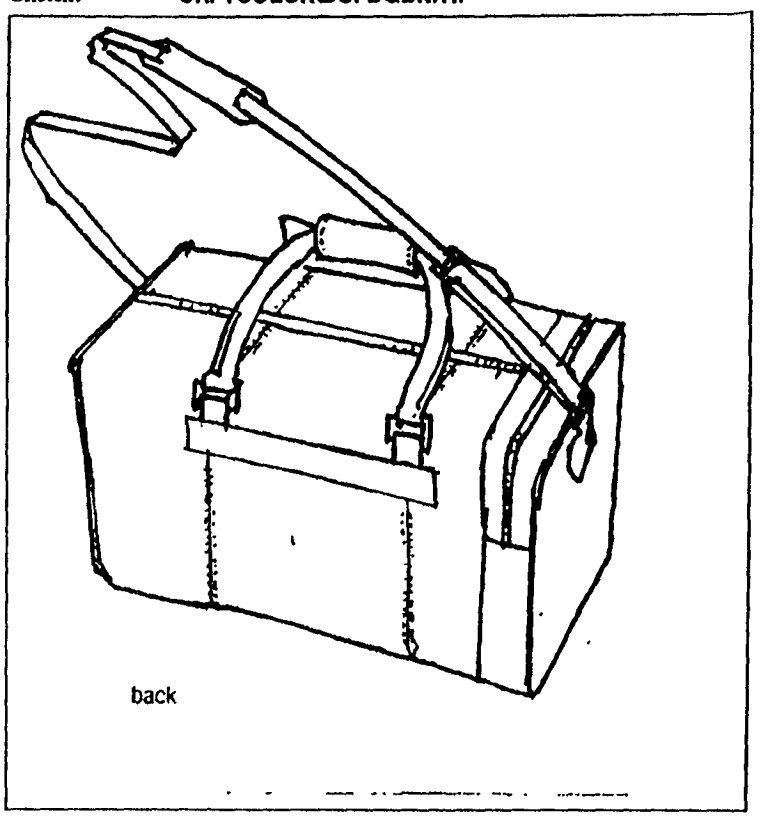

Philip Morris PA# Y13781

20418835S9

Source: https://www.industrydocuments.ucsf.edu/docs/xnxl0000

Macy Product Development

Style #:

DUFFEL BAG

Construction Diagram

Season:	Fall 1994	Dept:	Philip Morris/Merit	Page	2 of 8
Style #:	DUFFEL BAG	Item:	Medium Duffel Bag	Report Date:	June 08, 1994
Design #:	PM-01	Fabric:	Napa Pigskin Leather	Report #:	PM0601.1
Size Range:	1 size	Vendor:	Alvin	In Store:	
Block Ref:		Country:	China P.A./P.O.:	Ship Date:	

Drawing 1: DUF-BTM.WMF

BOTTOM VIEW

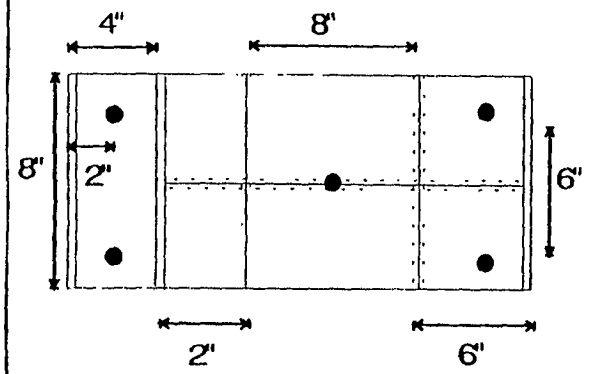

TOP VIEW

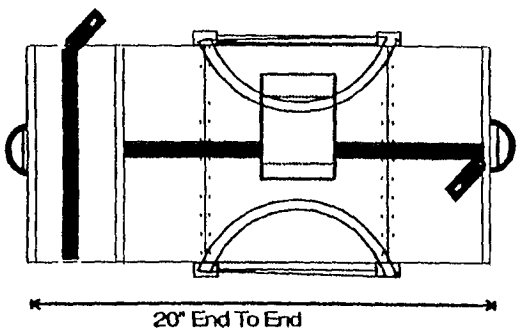

Drawing 2: HANDLE.WMF

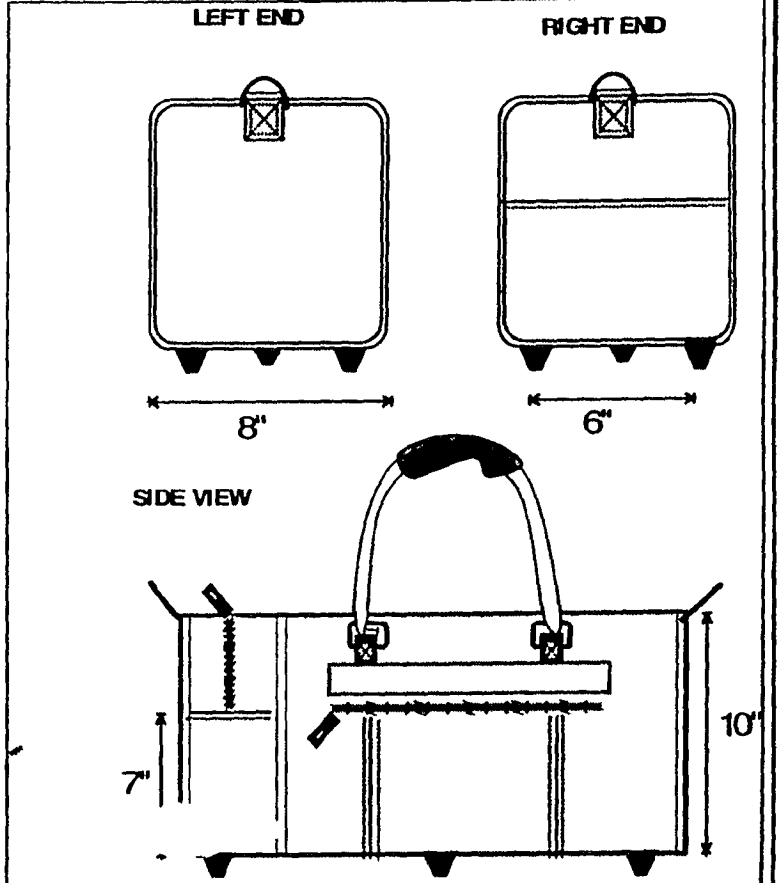

Z041883560

Source: https://www.industrydocuments.ucsf.edu/docs/xnxl0000

Macy Product Development	Style #:	DUFFEL BAG	Construction Diagram #2

Season:	Fall 1994	Dept:	Philip Morris/Merit	Page	3 of 8
Style #:	DUFFEL BAG	Item:	Medium Duffel Bag	Report Date:	June 08, 1994
Design #:	PM-01	Fabric:	Napa Pigskin Leather	Report #:	PM0601.1
Size Range:	1 size	Vendor:	Alvin	In Store:	
Block Ref:		Country:	China P.A./P.O.:	Ship Date:	

Drawing I: FRDGLSH5.TIF

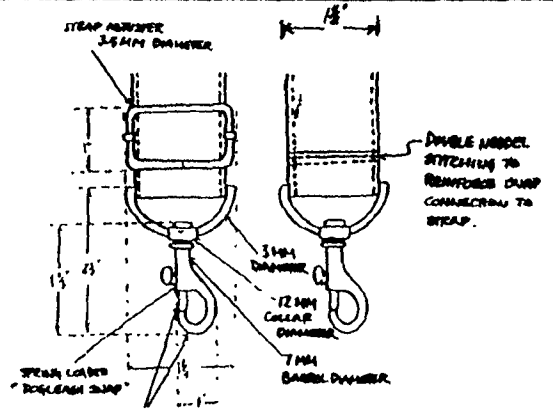

Drawing PADSALL.WMF

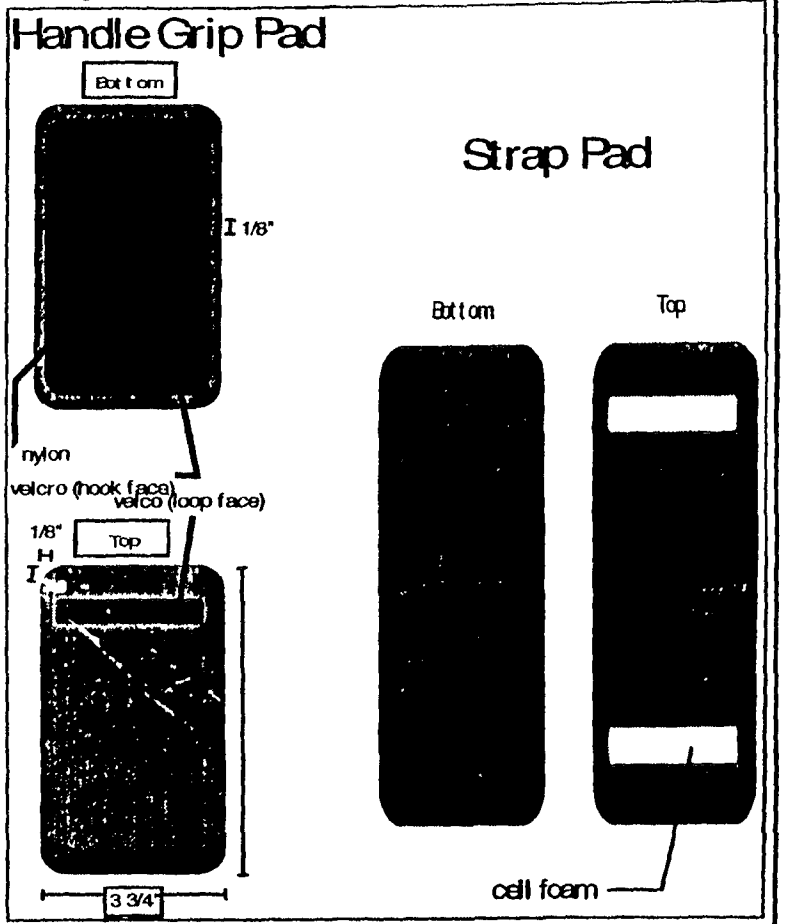

2041883561

cnstdgrm ɔr 94 FALL94 MDFDSHR Prototype DUFFBAG (C) 19. K H. Macy & Co., Inc.

Source: https://www.industrydocuments.ucsf.edu/docs/xnxl0000

Macy Product Development

Style #: **DUFFEL BAG**

Development History (L)

Season:	Fall 1994	Dept:	Philip Morris/Merit	Page	4 of 8
Style #:	DUFFEL BAG	Item:	Medium Duffel Bag	Report Date:	June 08, 1994
Design #:	PM-01	Fabric:	Napa Pigskin Leather	Report #:	PM0601.1
Size Range:	1 size	Vendor:	Alvin	In Store:	
Block Ref:		Country:	China P.A./P.O.:	Ship Date:	

Spec Form:	LUGGAGE	Date		5/23											FINAL
Code	Measurement Term	TOL. +/-	Orig Spec	C/S Spec	Diff.		Orig. Spec	Spec			Orig. Spec	C/S Spec	Diff.		REQRD
201	Bag Length (along bottom edge)	1/4"	20"	20"	0										
205	Bag Width	1/4"	8"	8"	0										
209	Bag Height	1/8"	10"	10"	0										
220	Main Compartment Zipper Length	1/8"		16"											
216	End Pocket Opening	1/8"		8 "											
217	End Pocket Depth	1/8"		7"											
216	Side Pocket Width	1/8"		10 1/2"											
217	Side Pocket Depth	1/8"		5 1/2"											
220	Side Pocket Zipper Length	1/8"		9 1/2"											
201	End Compartment Length	1/8"		4"											
220	End Compartment Zipper Length	1/8"		12 1/4"											
	Handle Tabs Plcmnt.(from ends)	1/8"		6"											
237	Handle Length (edge to edge)	1/4"		21 1/4"											
239	Handle Circ. (at high point)	1/8"		2 1/4"											
211	Handle Pad Closure-length	1/8"		5 3/4"											
215	Handle Pad Closure- width	1/8"		3 3/4"											
	Handle Pad Turnback	0		1/8"											
235	Strap Length (edge to edge)	1/4"	48"	48 1/2"	+1/2"										
236	Strap Width (edge to edge)	1/16"	1 1/2"	1 1/2"	0										
211	Reinforcement Tabs - l x w	0		1"											
	Corner Lugg. Feet - frm. sides	1/8"		1"											
	Middle Lugg. Foot - frm. sides			center											
201	Inside Bottom Panel - Length	1/16"		15"											
205	Inside Bottom Panel - width	1/16		7"											
	Logo Placement														

2041883562

Source: https://www.industrydocuments.ucsf.edu/docs/xnxl0000

Prototype

Small Piece Reference

Macy Product Development

Style #:	DUFFBAG			Market	
Division:	FALL94	Design #:	PM-01	Block Ref:	
Season:	MDFDSHR	Size Range:	1 size	Appr.	
Item:	Medium Duffel Bag			Date:	June 02, 1994
Page	5 of 8			Report	June 08, 1994 9:37 am

111

DOGLEASH	STRAP ADJUSTER	STRAP D-RING	HANDLE RING	LUGGAGE FOOT	ZIPPER PULL	
	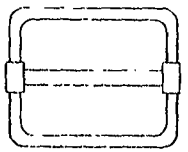	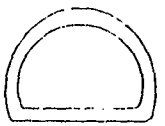				

STRAP PAD	HAND PAD	PVC SHEET				
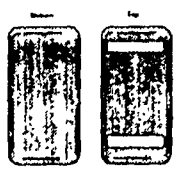	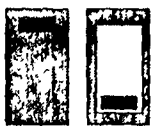					

Integrated Bottom PVC sheet is covered with twill weave, 100% polyester DTM lining as main compartment.

Source: https://www.industrydocuments.ucsf.edu/docs/xnxl0000

Prototype

Material Specifications

Macy Product Development

Style #: DUFFBAG
Division: FALL94 Design #: PM-01
Season: MDFDSHR Size Range: 1 size
Item: Medium Duffel Bag
Page 6 of 8

Market Rep:
Block Ref:
Appr.
Date: June 03, 1994
Report Date: June 07, 1994 10:54 am

///

Component	Description	Content	Color	Dimensions/Weight	Units
Shell, Piping Cover,	Pigskin Nappa	100% Leather	Merit Brown	1.2-1.4 MM thick	
Handle Covers, Strap,					
Strap Pad Cover, Ring					
Dry Lining	Twill Weave Lining	100% Polyester	DTM	5.5-6.0 oz/y2	
Wet Lining	PU Coated Plain Weave	100% Nylon	DTM	210T (120x90,80x80)	
Piping	PVC Roping	100% PVC		4.0 MM thick	
Strap Pad Padding	Open Cell Foam			10 MM thick	1 ea.
Logo Patch	Embossed Pigskin	100% Leather	DTM	3" length x 1.5" width	1 ea.
Luggage Feet	Center Rivet w/ washers	Metal (plastic washers)	Antique Brass		5 ea.
Zippers	YKK type #5	Metal	Antique Brass	#5 size	3 ea.
Zipper Pulls/Sliders		Metal	Antique Brass		3 ea.
Zipper Tape	Twill weave	100% Cotton	DTM		3 sets
Dogleash Snaps	Spring loaded	Metal	Antique Brass	see diagram	2 ea.
D-Rings		Metal	Antique Brass	see diagram	2 ea.
Handle Rings		Metal	Antique Brass	see diagram	4 ea.
Strap Adjuster		Metal	Antique Brass	see diagram	1 ea.
Integrated Handles	Nylon Roping	Nylon	DTM	see diagram	2 ea.
Thread		Nylon	DTM		
Integrated Bottom		PVC Sheet		3.0 MM	1 ea.

(C) Microdynamics Inc

2041883564

Source: https://www.industrydocuments.ucsf.edu/docs/xnxl0000

Prototype

Packaging & Shipping

Macy Product Development

Style #: DUFFBAG
Division: FALL94 Design #: PM-01
Season: MDFDSHR Size Range: 1 size
Item: Medium Duffel Bag
Page 7 of 8

Market Rep:
Block Ref:
Appr.
Date: June 03, 1994
Report Date: June 07, 1994 10:42 am

111

POLY BAG	PACKING MISC.	PACKING METHOD	HANGTAG		
Each duffle bag packed	Place following in the	12 pieces per carton	To be affixed with swift		
within a polybag and	Main Compartment of		tag plastic loop method		
tape sealed.	each bag:	Master Carton:	to carry handle.		
THICKNESS: 1.0 MM		SIZE: est. 2.4 cu. ft.			
		WT: est. 16 kgs.	Hangtag supplier by		
Printed on poly bag:	Silica package		Merit.		
		Carton Markings:			
STYLE #:	Shoulder strap (rolled,				
P.O. #:	packed with plastic)	TBA			
RN #:					
COUNTRY OF ORIGIN:					
WARNING:					
PLASTIC BAGS CAN BE					
DANGEROUS. TO					
AVOID DANGER OF					
SUFFOCATION, KEEP					
THIS WRAPPER AWAY					
FROM BABIES &					
CHILDREN					

(C) 19[illegible]rodynamics Inc.

20418835 65

Source: https://www.industrydocuments.ucsf.edu/docs/xnxl0000

Prototype

Time/Action Calendar

Macy Product

Style #: DUFFBAG
Division: FALL94
on: MDFDSHR
Item: Medium Duffel Bag
Design #: PM-01
Page 8 of 8

Size Range: 1 size
Market Rep:
Block Ref:
Appr.
Date: June 08, 1994
Report Date: June 08, 1994 9:15 am

///

Event Name	Plan Date	Rvsd Plan Date	Date Completed	Notes
Request For Bid				
Bid Submit Date				
PM P.O Received				
Color Approval				
Materials Approval				
Counter Sample Approval				
Trim/Labels In Factory				
Start Production				
1. Inspection				
X-Factory Date				
In DC Date				
Reorder Date				
Start Production				
Reorder X-Fty Date				
Reorder In DC Date				

2041883566

checklist 17 Mar 94

(C) 1993-94 Microdynamics Inc

Source: https://www.industrydocuments.ucsf.edu/docs/xnxl0000

PURCHASE ORDER REQ
The Necessary Signatures
At the Necessary Time
To "Make It Happen"

Step 4

2041883567

Source: https://www.industrydocuments.ucsf.edu/docs/xnxl0000

Form #1507
PM INC REV 4/80
COMPD/466A/A142

Type 2

P.O. NO.: Y13781

PURCHASE REQUISITION

ORDER FROM:	MACY'S PRODUCT DEVELOPMENT	DATE:	6/1/94
	11 Penn Plaza (submitted 6/9)		
	New York, New York 10001	TERMS:	
	ATTN: Mary Ott		
SHIP TO:	Catalog Resources Inc.	F.O.B.	
	100 Commerce Way (LCS)		
	Dover, DE		

QUANTITY	ITEM	UNIT PRICE	TOTAL
	Merit Awards Collection Leather Duffel Bag		
6,400	POS # 73892	$22.25	$142,400.00
	Please note add'l volume rebate available to Merit after surpassing forecasted qty. of 12,800 (see letter from Mary Ott attched)		
	Description: as per attached (Page 2)		
	• Color per Pix Sample		
	• Delivery: 4300 - 8/1, 2100 9/1		
	• Lead Times: ~~30~~ 90 Days		
	• Vendor to maintain pricing from: to: 5/1/94 to 3/31/95		
	• ~~Signed agreement on file~~ 2,400		
	• Minimum reorder quantity: ~~3,000~~ Bags		
	TOTAL:		$142,400.00

YH

ACCTG. CODE: 043-133-3301-27-I8K0

Prepared By: V. Strychack

Departmental Approval: 6/1

Acctg. Dept. Approval:

Executive Approval: 6/1/94

Vendor update

Signed 6/2/94

(NXS) (VBS)

20418835 68

Source: https://www.industrydocuments.ucsf.edu/docs/xnxl0000

FORM #1507
PHA INC. REV. 4/80
COMP 04446A/A142

PURCHASE REQUISITION

P O NO _____

ORDER FROM: MACYS PRODUCT DEVELOPMENT

SHIP TO: CRI/LCS

DATE 6/1 19 94

REQ. NO. _____

TERMS. _____

FOB _____

QUANTITY	ITEM	UNIT PRICE	TOTAL
	Merit awards Collection Leather Duffle Bag		

DESCRIPTION: PIGSKIN NAPPA DUFFLE BAG. WITH A SINGLE ZIPPER MAIN COMPARTMENT OPENING. ONE END POCKET WITH TOP OPENING ZIPPER ACCESS. SIDE ZIPPER OPENING ENVELOPE POCKET. INTEGRATED CARRY HANDLES OF PIGSKIN REINFORCED WITH HEAVY NYLON ROPING . ADJUSTABLE PIGSKIN SHOULDER STRAP THAT IS REMOVEABLE USING DOGLEASH SNAPS. FULLY LINED WITH POLYESTER TWILL.

- OVERALL SIZE IS 20"LONG X 8"WIDE X 10"HIGH.
- CARRY HANDLES FEATURE A HOOK AND LOOP PADDED LEATHER HAND GRIP.
- OPEN CELL FOAM PADDED LEATHER SHOULDER PAD ON ADJUSTABLE REMOVEABLE SHOULDER STRAP. FOAM IS 10MM THICK
- ANTIQUE BRASS ZIPPERS USED THROUGHOUT WITH ANTIQUE BRASS SLIDERS AND HEADERS
- INTEGRATED RIGID BOTTOM OF PVC SHEET 3.0 MM THICK .COVERED WITH POLYESTER TWILL LINING.
- FIVE ANTIQUE BRASS FEET RIVETED TO THE BOTTOM OF THE BAG.
- LEFT SIDE END POCKET FEATURES AN INTERIOR "WET POCKET" OF 210 T NYLON (120 X 90. 80x80) WITH PU COATING. END PANEL RT. SIDE HAS INTEGRATED ENVELOPE POCKETS.
- LEATHER PIPING ON END SEAMS.

2041883569

PURPOSE _____

DATE REQUIRED _____

DELIVER TO _____ DEPT. _____

ACCTG. CODE _____ ACCTG DEPT APPROVAL _____

PREPARED BY _____

DEPARTMENTAL APPROVAL _____

EXECUTIVE APPROVAL _____

Source: https://www.industrydocuments.ucsf.edu/docs/xnxl0000

PURCHASE ORDER
"Now It's Happening"

Step 5

2041883570

Source: https://www.industrydocuments.ucsf.edu/docs/xnxl0000

PURCHASE ORDER

OFFICE COPY

PHILIP MORRIS
U.S.A.
120 PARK AVENUE, NEW YORK, N.Y. 10017

CABLE ADDRESS: POLO NEW YORK
PHONE: AREA CODE 212-880-5000

SHOW THIS ORDER NO. ON YOUR INVOICE

Y13781

Form 81618U PM USA REV. 2/92 COMP. 50(4)

DATE 06/10/94

VENDOR NO. 335829

VENDOR: MACY PRODUCT DEVELOPMENT
11 PENN PLAZA
NEW YORK, NY 10001
ATT: Mary OTT

SHIP TO
CATALOG RESOURCES, INC./LCS
155 COMMERCE WAY
DOVER, DELAWARE 19901

REQUISITIONER	BUYER	BID REF./EXP. INT.	CONFIRMING TO	TAXABLE
N. SUTER	V. STRYCHACK	Y4AMP		NO TAX

F.O.B.	ROUTE VIA	PREPAID	TERMS
PLANT		FRT PAID	NET 30

1. Purchase Order number must appear on all invoices, bills of lading, cases, packing list and correspondence
2. Invoices must be rendered on day of shipment to: 120 Park Avenue, N.Y., N.Y. 10017
3. Refer to PM USA Routing Guide for instructions on carrier selection and freight invoicing

LINE	QUANTITY	UM	UNIT PRICE	AMOUNT
001	6,400	EA	22.25	142,400.00

PART/DESC 73892 MERIT LEATHER DUFFLE BAG

MERIT AWARDS COLLECTION
- PIGSKIN NAPPA DUFFLE BAG, WITH A SINGLE ZIPPER MAIN COMPARTMENT OPENING. ONE END POCKET WITH TOP OPENING ZIPPER ACCESS. SIDE ZIPPER OPENING ENVELOPE POCKET. INTEGRATED CARRY HANDLES OF PIGSKIN REINFORCED WITH HEAVY NYLON ROPING. ADJUSTABLE PIGSKIN SHOULDER STRAP THAT IS REMOVABLE USING DOGLEASH SNAPS. FULLY LINED WITH POLYESTER TWILL.
-OVERALL SIZE IS 20" LONG X 8" WIDE X 10" HIGH
- CARRY HANDLES FEATURE A HOOK AND LOOP PADDED LEATHER HAND GRIP.
-OPEN CELL FOAM PADDED LEATHER SHOULDER PAD ON ADJUSTABLE REMOVEABLE SHOULDER STRAP. FOAM IS 10MM THICK
- ANTIQUE BRASS ZIPPERS USED THROUGHOUT WITH ANTIQUE BRASS SLIDERS AND HEADERS
-INTEGRATED RIGID BOTTOM OF PVC SHEET 3.0 MM THICK COVERED WITH POLYESTER TWILL LINING.
-FIVE ANTIQUE BRASS FEET RIVETED TO THE BOTTOM OF THE BAG.
-LEFT SIDE END POCKET FEATURES AN INTERIOR "WET POCKET" OF 210 T NYLON (120 X 90, 80X80) WITH PU COATING. END PANEL RT. SIDE HAS INTEGRATED ENVELOPE POCKETS
-LEATHER PIPING ON END SEAMS.

(CONTINUED NEXT PAGE)

2041883571

By _____
PHILIP MORRIS U.S.A.

_____

THIS PURCHASE ORDER IS ALSO SUBJECT TO THE PRINTED TERMS AND CONDITIONS ON THE REVERSE AND TO ALL ATTACHMENTS HERETO. TOGETHER THEY CONSTITUTE THE ENTIRE AGREEMENT BETWEEN BUYER AND SELLER ON THEIR SUBJECT MATTER. NO REVISION OF OR ADDITION TO ANY OF THEM SHALL BE EFFECTIVE WHETHER IN SELLER'S ACKNOWLEDGEMENT FORM OR OTHERWISE WITHOUT BUYER'S WRITTEN AGREEMENT. ANY SHIPMENT HEREUNDER CONSTITUTES ACCEPTANCE BY SELLER OF ALL TERMS AND CONDITIONS.

Source: https://www.industrydocuments.ucsf.edu/docs/xnxl0000

PURCHASE ORDER

OFFICE COPY

PHILIP MORRIS
U.S.A.
120 PARK AVENUE, NEW YORK, N.Y. 10017

CABLE ADDRESS: POLO NEW YORK
PHONE: AREA CODE 212-880-8000

SHOW THIS ORDER NO. ON YOUR INVOICE

Y13781

DATE

FORM #1515U PM USA REV 2/92 COMP 50(4)

VENDOR NO. 335829

VENDOR: MACY PRODUCT DEVELOPMENT

SHIP TO

REQUISITIONER	BUYER	BID REF./EXP. INT.	CONFIRMING TO	TAXABLE

F.O.B.	ROUTE VIA	PREPAID	TERMS

1. Purchase Order number must appear on all invoices, bills of lading, cases, packing list and correspondence
2. Invoices must be rendered on day of shipment to: 120 Park Avenue, N Y, N Y. 10017
3. Refer to PM USA Routing Guide for instructions on carrier selection and freight invoicing

LINE	QUANTITY	UM	UNIT PRICE	AMOUNT

LEAD TIME: 90 DAYS
VENDOR TO MAINTAIN PRICING FROM 5/1/94 THROUGH 3/31/95
MINIMUM REORDER QUANTITY: 2400 BAGS
REBATE AGREEMENT: 1% REBATE PER 10% INCREMENTAL INCREASE IN QUANTITY WITH A CAP OF 5% FOR 12,801-14,080 1%, 14,081-15,360 2%, 15,361-16,640 3%, 16,641-17,920 4%, AND ABOVE 17,921 5%
PRODUCTION AND QUALITY:

- ARTWORK WILL BE PROVIDED BY PHILIP MORRIS.
- ARTWORK IS THE PROPERTY OF PHILIP MORRIS. SUPPLIER IS RESPONSIBLE FOR RETURNING ART UPON COMPLETION OF ORDER.
- PRE-PRODUCTION SAMPLES TO BE APPROVED BY PHILIP MORRIS BEFORE PRODUCTION BEGINS. QUALITY TO MATCH APPROVED PROTOTYPE SUBMITTED.
- SUPPLIER IS RESPONSIBLE FOR SHIPPING TO THE BUYER PRODUCTION CASES. QUANTITY AND REQUIRED DATES ACCORDING TO INSTRUCTION FROM BUYER.
- SUPPLIER IS RESPONSIBLE FOR DEFECTIVE MERCHANDISE AND SHALL REPLACE WITH QUALITY PRODUCT. DEFECTIVE GOODS AND OVERRUNS CANNOT BE RESOLD BY SUPPLIER.
- SUPPLIER WILL PROVIDE PHILIP MORRIS WITH SHIPPING AND DELIVERY INFORMATION AS PER THE ATTACHED DELIVERY PLAN.
- PHILIP MORRIS RESERVES THE RIGHT TO SELECT OUTSIDE QUALITY CONTROL AGENTS TO MONITOR PRODUCTION. THESE AGENTS MUST HAVE ACCESS TO THE MANUFACTURING FACILITY IN ACCORDANCE

(CONTINUED NEXT PAGE)

2041883572

By _____ _____

PHILIP MORRIS U.S.A.

THIS PURCHASE ORDER IS ALSO SUBJECT TO THE PRINTED TERMS AND CONDITIONS ON THE REVERSE AND TO ALL ATTACHMENTS HERETO. TOGETHER THEY CONSTITUTE THE ENTIRE AGREEMENT BETWEEN BUYER AND SELLER ON THEIR SUBJECT MATTER. NO REVISION OF OR ADDITION TO ANY OF THEM SHALL BE EFFECTIVE WHETHER IN SELLER'S ACKNOWLEDGEMENT

Source: https://www.industrydocuments.ucsf.edu/docs/xnxl0000

PURCHASE ORDER

OFFICE COPY

PHILIP MORRIS
U. S. A.
120 PARK AVENUE, NEW YORK, N.Y. 10017

SHOW THIS ORDER NO. ON YOUR INVOICE

Y13781

CABLE ADDRESS: POLD NEW YORK
PHONE: AREA CODE 212-880-5000

DATE

FORM #1918U PM USA REV 2/92 COMP 50(4)

VENDOR NO. 335029

VENDOR: MACY PRODUCT DEVELOPMENT

SHIP TO

REQUISITIONER	BUYER	BID REF./EXP. INT.	CONFIRMING TO	TAXABLE

F.O.B.	ROUTE VIA	PREPAID	TERMS

1. Purchase Order number must appear on all invoices, bills of lading, cases, packing list and correspondence
2. Invoices must be rendered on day of shipment to: 120 Park Avenue, N.Y., N.Y. 10017
3. Refer to PM USA Routing Guide for instructions on carrier selection and freight invoicing

LINE	QUANTITY	UM	UNIT PRICE	AMOUNT

WITH A QUALITY ASSURANCE INSPECTION PROGRAM.

PACKING:
- PACKING FACTOR: BULK
- PACKING LIST SHOULD ALWAYS BE EASILY ACCESSIBLE.
- PROOF OF CASE COPY TO BE SUBMITTED AND APPROVED BY PHILIP MORRIS BEFORE CASES ARE PRINTED.

CASE MARKINGS:
- ON TWO SIDES OF CASE:
  PRODUCTION DATE
  (ADDRESSEE)
  POS NO. 73892
  MERT DUF BAG
  MERIT AWARDS COLLECTION
  PREPAID FREIGHT

DELIVERY:

- PHILIP MORRIS RESERVES THE RIGHT TO CHARGE A PENALTY FEE OF 1% PER DAY OF THE VALUE OF GOODS NOT RECEIVED ACCORDING TO DELIVERY DATES GIVEN. IN ADDITION, SUPPLIER IS TO NOTE PARAGRAPHS 13, 15, 16 AND 17 ON THE BACK OF THIS PURCHASE ORDER.
- DELIVER AS PER SCHEDULED DELIVERY TO LCS.

****

(CONTINUED NEXT PAGE)

2041883573

By _____ _____

PHILIP MORRIS U.S.A.

THIS PURCHASE ORDER IS ALSO SUBJECT TO THE PRINTED TERMS AND CONDITIONS ON THE REVERSE AND TO ALL ATTACHMENTS HERETO. TOGETHER THEY CONSTITUTE THE ENTIRE AGREEMENT BETWEEN BUYER AND SELLER ON THEIR SUBJECT MATTER. NO REVISION OF OR ADDITION TO ANY OF THEM SHALL BE EFFECTIVE WHETHER IN SELLER'S ACKNOWLEDGEMENT FORM OR OTHERWISE WITHOUT BUYER'S WRITTEN AGREEMENT. ANY SHIPMENT HEREUNDER CONSTITUTES ACCEPTANCE BY SELLER OF ALL TERMS AND CONDITIONS.

Source: https://www.industrydocuments.ucsf.edu/docs/xnxl0000

PURCHASE ORDER

OFFICE COPY

SHOW THIS ORDER NO. ON YOUR INVOICE

Y13781

PHILIP MORRIS
U.S.A.
120 PARK AVENUE, NEW YORK, N.Y. 10017

CABLE ADDRESS: POLD NEW YORK
PHONE: AREA CODE 212-880-3000

DATE

FORM #1618J PM USA REV. 2/92 COMP. 50(4)

VENDOR NO. 335829

VENDOR: MACY PRODUCT DEVELOPMENT

SHIP TO

REQUISITIONER	BUYER	BID REF./EXP. INT.	CONFIRMING TO	TAXABLE

F.O.B.	ROUTE VIA	PREPAID	TERMS

1. Purchase Order number must appear on all invoices, bills of lading, cases, packing list and correspondence
2. Invoices must be rendered on day of shipment to: 120 Park Avenue, N.Y, N.Y. 10017
3. Refer to PM USA Routing Guide for instructions on carrier selection and freight invoicing.

LINE	QUANTITY	UM	UNIT PRICE	AMOUNT

REFER TO PM USA ROUTING GUIDE PREVIOUSLY SENT UNDER SEPARATE COVER. IF YOU DO NOT HAVE A COPY ON FILE, PLEASE CALL ANDREA PATTERSON AT (212)880-3221. IF YOU HAVE ANY QUESTIONS REGARDING THE INFORMATION CONTAINED IN THE ROUTING GUIDE CONTACT DOUG VILLANI, TRANSPORTATION LOGISTIC SUPERVISOR AT (212) 878-2877.

****

IN ORDER TO ENSURE PAYMENT OF INVOICES, SUPPLIERS ARE RESPONSIBLE FOR ASSURING THAT A RECEIVING DOCUMENT/PROOF-OF-DELIVERY IS ISSUED TO PHILIP MORRIS FOR ANY SHIPMENT MADE TO A NON PHILIP MORRIS RECEIVING LOCATION. ALL SHIPPING DOCUMENTS WILL REFERENCE THE PURCHASE ORDER NUMBER."

****

NO UNDERRUN NO OVERRUN

****

"IN ORDER TO ASSIST PHILIP MORRIS IN BETTER UNDERSTANDING ITS SUPPLIERS' DEVELOPMENT OF COSTS, PHILIP MORRIS OR ITS DESIGNATED AGENT MAY INSPECT, REVIEW AND COPY VENDOR'S BOOKS AND RECORDS AT REASONABLE TIMES DURING NORMAL BUSINESS HOURS UPON REASONABLE, ADVANCE NOTICE TO THE SUPPLIER AND AT THE EXPENSE OF PHILIP MORRIS THROUGHOUT THE TERM OF THE PURCHASE ORDER AND FOR SIX MONTHS THEREAFTER."

****

SUPPLIER TO SEND INVOICE IN TRIPLICATE TO:
PHILIP MORRIS USA
120 PARK AVENUE

(CONTINUED NEXT PAGE)

2041883574

By _____

PHILIP MORRIS U.S.A.

_____

THIS PURCHASE ORDER IS ALSO SUBJECT TO THE PRINTED TERMS AND CONDITIONS ON THE REVERSE AND TO ALL ATTACHMENTS HERETO. TOGETHER THEY CONSTITUTE THE ENTIRE AGREEMENT BETWEEN BUYER AND SELLER ON THEIR SUBJECT MATTER. NO REVISION OF OR ADDITION TO ANY OF THEM SHALL BE EFFECTIVE WHETHER IN SELLER'S ACKNOWLEDGEMENT

Source: https://www.industrydocuments.ucsf.edu/docs/xnxl0000

PURCHASE ORDER

OFFICE COPY

PHILIP MORRIS
U.S.A.
120 PARK AVENUE, NEW YORK, N.Y. 10017

CABLE ADDRESS: POLD NEW YORK
PHONE: AREA CODE 212-880-6000

SHOW THIS ORDER NO. ON YOUR INVOICE

Y13781

FORM #1616U PM USA REV. 2/92 COMP. 50(4)

DATE

VENDOR NO. 335829

VENDOR: MACY PRODUCT DEVELOPMENT

SHIP TO

REQUISITIONER	BUYER	BID REF./EXP. INT.	CONFIRMING TO	TAXABLE

F.O.B.	ROUTE VIA	PREPAID	TERMS

1. Purchase Order number must appear on all invoices, bills of lading, cases, packing list and correspondence.
2. Invoices must be rendered on day of shipment to: 120 Park Avenue, N.Y., N.Y. 10017
3. Refer to PM USA Routing Guide for instructions on carrier selection and freight invoicing

LINE	QUANTITY	UM	UNIT PRICE	AMOUNT

USA FINANCE DEPARTMENT - 15TH FLOOR
NEW YORK, NY 10017

DIST ACCT NY200 043133 330127I8K0

SUBLINE	SUBLINE QUANTITY	DELIVERY DATE
00001	4,300	08/01/94
00002	2,100	09/01/94

2041883575

By _____
PHILIP MORRIS U.S.A.

TOTAL AMOUNT 142,400.00

THIS PURCHASE ORDER IS ALSO SUBJECT TO THE PRINTED TERMS AND CONDITIONS ON THE REVERSE AND TO ALL ATTACHMENTS HERETO. TOGETHER THEY CONSTITUTE THE ENTIRE AGREEMENT BETWEEN BUYER AND SELLER ON THEIR SUBJECT MATTER. NO REVISION OF OR ADDITION TO ANY OF THEM SHALL BE EFFECTIVE WHETHER IN SELLER'S ACKNOWLEDGEMENT FORM OR OTHERWISE WITHOUT BUYER'S WRITTEN AGREEMENT. ANY SHIPMENT HEREUNDER CONSTITUTES ACCEPTANCE BY SELLER OF ALL TERMS AND CONDITIONS.

Source: https://www.industrydocuments.ucsf.edu/docs/xnxl0000

REQUEST FOR SPECIAL MAILING/MESSENGER

INSTRUCTIONS: Complete *all* information requested below, retain the *pink* copy for your records. Attach form and labels (*2 labels required for overnight packages*) to item being sent. For pick-up of *large items* call shipping and receiving on extension 2395; if you pefer, small items may be hand delivered to the Service Desk at 120 Park, Level–C or placed in your out box for pick-up by the mail clerks. For messenger service please bring the items to the lobby messenger room. When filling out this form, please indicate in the column marked "CODE SELECTION" your numeric choice for each field on the form. For example, if you work for USA Sales, under code selection column you would indicate your division number as **2** and department number as **201**. If your package requires next day delivery by 10:30 A.M., you would indicate the service requested as **22**. If you have any questions, please contact the supervisor of shipping and receiving on extension 2398.

NAME: Jacqueline W [illegible] **DATE:** 6.14.94 **EXTENSION:** 3363

DIVISION:

1–PM Management Corp.

2–USA

CODE SELECTION

DIVISION # 2

DEPARTMENT:

101–Controller	108–Tax	201–Sales
102–HQ ICS	109–Audit	202–Marketing
103–General Counsel	110–Treasurer	203–Operations
104–Public Affairs	111–Pension	204–Corp. Affairs
105–Planning	112–HQ Services	205–Finance
106–Personnel	113–Travel	206–Personnel
107–Executive	114–PMCC	207–Executive

DEPT # 205

TYPE OF SERVICE:

NOTE: ON FRIDAY, UNLESS SPECIFIED, OVERNIGHT DELIVERY WILL BE MADE ON MONDAY

SERVICE # 22

[illegible]URIER
[illegible]es shown for 1 lb package
22–Overnight by 10:30 $6.00
23–Overnight by 12.00 noon $5.00
24–Saturday delivery by 5:00 pm $5.00
25–Second Day $3.50

MESSENGER
29–Regular 3 hours $5.00
30–Rush 2 hours $8.50
31–Trucking*
*Price depends on weight and destination

INSURED VALUE:

UPS/RPS
Prices shown for 1 lb package
26–Regular
Residential $2.08
Business $2.28
27–Second Day $5.50

U.S. POSTAL SERVICE
Price shown for 1 ounce envelope
32–Priority Mail $2.90 up to 2 lbs.
33–Certified Mail $1.29
34–Int'l.Registered Mail $4.90
35–Express Mail $9.95
36–Certified Return Receipt $2.29
37–Int'l. Registered Return Receipt $5.90
38–Express Return Receipt $10.95

FOR S&R USE ONLY

WEIGHT: _____

SHIP TO:

NAME: Mary Ott

C/O: Macy Product Development

ADDRESS: 11 Penn Plaza

STATE: NY ZIP CODE: 10001 TELEPHONE #

FORM #3251A PM INC. REV. 3/93 #ed Forms

Distribution: White–Shipping Yellow–Shipping Pink–Requestor.

2041883576

Source: https://www.industrydocuments.ucsf.edu/docs/xnxl0000

2041883577

Source: https://www.industrydocuments.ucsf.edu/docs/xnxl0000

2041883579

Source: https://www.industrydocuments.ucsf.edu/docs/xnxl0000

Philip Morris USA Continuity Promotions

Functional Area: Field Communications *Functional Responsibility: Assemble and Write all F.C.'s* *Name: Jack Mansmann* *Page No. 9*

FUNCTIONAL IMPACT CHART

Inputs	*Source* →	*My Job* →	*Output*	*Distribution*
Marketing Plans and Retain Promotions (Quantities)	Marketing Customer Service/Pre Con	Describe scope of functional responsibility: Communicate all details of the program to Field Sales.	All program details: product, incentives, allocations, etc.	Sales Force
Program Restrictions	Marketing Legal		Markets not to participate.	Sales Force
Kit Numbers POS Numbers	Logistics		Verify numbers for POS, kits, promotion codes, delivery dates, order dates and quantities.	Sales Force
Promotion Codes Allocations	Trade Marketing			Sales Force
Fulfillment Process 1-800 # Catalog Ordering	Marketing Purchasing	Time needed to complete (in weeks): 13	How it works and when it will be on line	Sales Force
Delivery of Program Communications and Sales Material	Madden Logistics Trade Marketing		When it can be delivered.	Sales Force

2041883580

Source: https://www.industrydocuments.ucsf.edu/docs/xnxl0000

PHILIP MORRIS U.S.A. INTER-OFFICE CORRESPONDENCE
120 PARK AVENUE, NEW YORK, NY 10017

TO: Select NYO and Richmond Personnel **DATE:** April 6, 1994

FROM: Trade Marketing/Jack Mansmann

SUBJECT: **MCS "Round-Up Week" - May 23 - 26, 1994**
- Participant Listing and Unit Assignments

Marlboro Country Store is kicking off in May! We have planned the MCS "Round-Up Week" inviting NYO and Operations personnel to participate in one of the biggest promotions in PM USA's history during **May 23 - 26, 1994**. Your participation has been approved by your department head and is required to help the Sales Force make this one of the most successful promotions ever.

Participants should make arrangements to meet their assigned Unit Managers on **Monday, May 23, 1994, no later than 12 noon**. Participants can look forward to working with Sales Reps in the Field Monday afternoon through Thursday morning, **May 26, 1994**. Please plan to attend Unit meetings on Thursday afternoon, to celebrate "Round-Up Week" experiences with your Unit. Participants should plan their return travel after the conclusion of Unit Meetings.

Please be advised that all Unit assignments have been finalized and are outlined on the attached listing. Any exchange of Unit assignments must be handled exclusively between participants and confirmed via MS Mail to my attention. Please plan your schedule accordingly to participate in this initiative and contact me via MS Mail or at (212) 880-3342 by **Monday, April 11, 1994**, with any issues.

Additionally, all expenses associated with this initiative must be charged to your department's travel budget.

Thanks for your cooperation in making this a great experience for everyone. Look for more details soon.

cc: F. Alfieri
B. Reuter

HARD COPIES PROVIDED BY NYO TO SELECT NYO AND RICHMOND PERSONNEL. FOR INTERNAL USE ONLY.

DOC. #322

2041883581

Source: https://www.industrydocuments.ucsf.edu/docs/xnxl0000

OCTEL NUMBER	LAST NAME	FIRST NAME	CITY	ST	LAST NAME	FIRST NAME	PHONE EXTENSION
112000	GOSS JR	ALBERT	CHESHIRE	CT	Dean	Ron	R-3798
111500	MORSE	ROBIN	PEMBROKE	MA	DeBlasio	James	R-2479
421600	BOWMAN	ORLIN	MARQUETTE	MI	Dimattia	Mark	2606
411800	MILLER	JEFFREY	AMHERST	OH	Dixon	Audrey	R-5165
441500	MCADOO	JANICE	HOBART	IN	Donohue	Christine	2879
130800	BRANIGAN	BRIAN	PARK RIDGE	NJ	Dorr	William	3222
430800	BRANNON JR	JAMES	LOUISVILLE	KY	Dnsco	Gayle	2554
131700	TELEGADIS	FRANK	MIDDLETOWN	NJ	Dzurilla	Ronald	3381
322000	CISSELL	PHILLIP	MEMPHIS	TN	Eastburn	Gary	3466
231000	SKEEN	EDDIE	NICKELSVILLE	VA	Egan	Beth	208100
542300	BREDENBERG	JOANN	ROSSMOOR	CA	Eibon	Jeanne	3491
241400	BREHEIM	ROBERT	PALM HARBOR	FL	Eisen	Karen	3594
431900	BRIGGS	THOMAS	PERRYSBURG	OH	Ellis	Natalie	2185
211200	NEDIMYER	KENNETH	HAGERSTOWN	MD	Emler	Jaye	3665
230500	WANNAMAKER	MICHAEL	DECATUR	GA	Ewan	Robert	R-5298
331900	BRISTOW	BRUCE	LAWTON	OK	Fadus	Charles	3069
360700	BROCK	MARTHA	HOUSTON	TX	Falvo	Jerry	3712
361500	ZAMARRIPA	EDWARD	SAN ANTONIO	TX	Fames	Michael	R-7450
130900	BROCKING	STEVEN	FOREST HILLS	NY	Fashola	Denise	2279
541000	BROFMAN	BRETT	HERMOSA BEACH	CA	Fernandez	Pascal	2410
241200	BUTLER	MELVIN	HEATHROW	FL	Fenn	Robert	3416
141000	BUFANO	JOYCE	BLANDON	PA	Fierstein	Susan	3281
350200	WAGNER	CATHY	LEWISVILLE	TX	Finch	Charles	300000
330200	BURGER	JON	CEDAR RAPIDS	IA	Fitzgibbon	Michael	3088
210200	BURKE	LAURA	SEVERNA PARK	MD	Floam	Dennis	3673
431500	BUSS	RONALD	FORT WAYNE	IN	Fontanez	Jose	2361
133600	MCMAHON	JOHN	POMPTON PLAINS	NJ	Fox	Richard	R-3486
221800	BUTLER	WILLIAM	FLORENCE	SC	Frederick	Elizabeth	3315
410400	BRYANT	WAYNE	MILFORD	OH	Fuller	Stuart	3562
242000	CAMPBELL	BRADLEY	FT. MYERS	FL	Funess	Laura	3336
521600	WYNN	MICHAEL	SANDY	UT	Fusco	Raymond	3297
130500	CAREY	JOHN	LEVITTOWN	NY	Garguilo	Thomas	2343
311000	RICHARDS	KENNETH	ROUND ROCK	TX	Garner	Gary	R-4774
211700	PURYEAR	SAMUEL	MIDLOTHIAN	VA	Gartenberg	Michael	2346
420600	CARR	LEO	LIVONIA	MI	Gawronski	Edward	3283
331600	POULOS	TODD	WICHITA	KS	Gee	Edward	2993
440300	ROPER	JEFFREY	PEORIA	IL	Gennaro	Mary	2762
121400	CASSELL	DENNIS	ERIE	PA	George	Jonathan	2266
531100	SCHENK	JAMES	OLYMPIC VALLEY	CA	Gilbert	Jacqueline	2805
210800	ONACHILA	CARL	FREDERICKSBURG	VA	Glanz	Ed	205100
221500	CHANDLER	ALEXANDER	FAYETTEVILLE	NC	Glastein	Harvey	3629
511400	CHAPMAN JR	PAUL	BILLINGS	MT	Godwin	Tom	2316
320800	CHEEKS-GRIFFITH	OLIVIA	RICHLAND	MS	Goldfarb	Arthur	2472
411100	WYNN II	JAMES	DUBLIN	OH	Goodman	William	R-7545
530700	BREAKFIELD	DEBRA	GILROY	CA	Gordon	Mary	3855
321600	CHOUCOUTOU	MITCHELL	SHREVEPORT	LA	Gordon	Rebecca	2369
331100	NELSON	MISHELL	OVERLAND PARK	KS	Gotti	Robert	3419
110100	MCEWEN	KEVIN	BREWER	ME	Grande	Mike	104100
321100	SANDEFUR	ROBERT	NATCHEZ	MS	Green	Rita	308300
222300	STAFFORD	TRACIE	GREENVILLE	SC	Greene	Julie	2945
430500	COODE	DAVID	LOUISVILLE	KY	Gross	Deane	3476
232900	COOK JR	WILLIAM	MOBILE	AL	Gurry	Nancy	3588
412300	COSTELLO	DOREEN	MUNHALL	PA	Halpern	Marian	3204
242400	CREWS	TERRY	TALLAHASSEE	FL	Harvey	Allen	3779
320700	COYNE	SUSAN	LAKE CHARLES	LA	Harvey	Charles	3834
120100	WOODHEAD	JOHN	RUTLAND	VT	Harwood	Hunter	108300
121100	MATELA	JOSEPHINE	BROCKPORT	NY	Haynes	Jen	R-7145
411900	CRICHTON	MARK	POLAND	OH	Hecht	Jeffrey	3517
130100	CUNNINGHAM	JACQUELYN	MILLER PLACE	NY	Heironimus	John	3380
121200	OATMEYER	JOHN	CHEEKTOWAGA	NY	Hendrick	Laurence	4124
321500	CURTIS	RANDY	LITTLE ROCK	AR	Henriques	Peter	4162
211100	STIRLING	ROBERT	WINCHESTER	VA	Herbert	Buck	209500
412000	DALONZO JR	ROCCO	EVANS CITY	PA	Herman	Lauren	2416
211900	SCHREFFLER	ROBERT	RICHMOND	VA	Herring	Matt	R-3718
212100	MERGLER	ANDREW	CHESAPEAKE	VA	Hill	James	R-5870
310600	DAMICO	ANTHONY	COLUMBIA	MO	Hilks	Michele	2967
110900	DAMON	THOMAS	ACTON	MA	Hopkins	Barry	3146
320500	CASCIO	SAMUEL	BATON ROUGE	LA	Horton	Samuel	3238
231400	DAVIS	CAROLINE	HARRISON	TN	Huaman	Alicia	3443
310900	QUALLS	LORI	JONESBORO	AR	Hubbard	Bob	R-3323
241000	WALMSLEY	RUSSELL	HEATHROW	FL	Huckfeldt	Robert	2925
221400	DAWSON	LYNDA	KINSTON	NC	Hughes	James	3181

2041833582

Source: https://www.industrydocuments.ucsf.edu/docs/xnxl0000

OCTEL NUMBER	LAST NAME	FIRST NAME	CITY	ST	LAST NAME	FIRST NAME	PHONE EXTENSION
233100	GARRIS	ALO	MONTGOMERY	AL	Meyers	Steven	5091
140400	MULROY	LINDA	WAYNE	PA	Middleton	David	3579
320300	GAUTHREAUX	GILBERT	HUSSER	LA	Mikulay	Robert	3624
230300	CAMPBELL	STUART	KENNESAW	GA	Miller	Dennis	3573
331000	GIBBS	JUDITH	OVERBROOK	KS	Miller	Karen	3599
311500	PETTERSON	THOMAS	TULSA	OK	Miller	Barbara	R-6621
240600	HARBOUR JR	CURTIS	WEST PALM BEACH	FL	Miller	Debra	3241
320200	MENDOZA	HERBERT	HAMMOND	LA	Milton	Rosemary	309500
233000	BANICK	JAMES	MONTGOMERY	AL	Mittag	Bianca	2376
210600	GILLESPIE	JAMES	FREDERICK	MD	Moore	Edna	2077
220500	DAVENPORT	LEONARD	KERNERSVILLE	NC	Moore	Robert	3128
222100	BURCHFIELD	DONALD	CHARLESTON	SC	Moore	William	2148
140300	GLEASON	JOHN	MARLTON	NJ	Moreo	George	3731
112500	BLOMSTEDT	BARRY	NORTH ATTLEBORO	MA	Morgan	James	4180
542800	SPERBER	ELISE	DANA POINT	CA	Mortensen	Jim	500000
140600	SPENCER	DESIREE	AMBLER	PA	Mosten	Daniel	2591
110800	GOUGH	MICHAEL	BURLINGTON	MA	Murphy	Michael	3345
133500	GOUKLER	RICHARD	MANAHAWKIN	NJ	Murphy	Virginia	3566
240900	HAGER	RICHARD	HEATHROW	FL	Murphy	John	3220
210700	GRAY	EDWARD	ALEXANDRIA	VA	Murray	Clark	2408
350700	GREEN	RITA	GRAND PRAIRIE	TX	Murray	Sheyrol	2641
133300	CLARIZIO	GAETANO	LINCROFT	NJ	Mussomeli	Josephine	3748
211400	GRIFFIN	MICHAEL	ROANOKE	VA	Narvekar	Sachin	2226
230400	GRIFFIN	TERRY	POWDER SPRINGS	GA	Naidle	Bruce	3589
542100	TAFOYA	ANTHONY	ALTA LOMA	CA	Nelson	Timothy	2982
140200	WENTWORTH	QUENTEN	SEWELL	NJ	Nelson	Doug	100000
240200	ARES	JUAN	MIAMI	FL	Nicholas	Nichelle	3294
140800	ROWLANDS	CYNTHIA	SINKING SPRING	PA	Nickert	Sheila	2432
511500	GUERRA	ERNEST	BOISE	ID	Nissenblatt	Susan	5039
240800	SAPEY	JOHN	VERO BEACH	FL	Nobles	Zora	209501
110200	RICHARDS	FRANCIS	WINDHAM	ME	Normington	Chip	108401
110400	HACKETT	JOHN	WESTBROOK	ME	Norris	Susan	3359
531300	WILSON	KRISTINE	SACRAMENTO	CA	O'Brien	Sheila	2419
111700	SARGEANT	CARRIE	PLAINVILLE	CT	O'Brien	Barry	3002
431600	SMITH	KELLY	FORT WAYNE	IN	Olson	Rich	400000
430300	VANDEWALLE	MARY	LEXINGTON	KY	Opengart	Susan	2646
132900	STAPEL	ROBYN	MIDLAND PARK	NJ	Oramas	Donna	2412
211600	NICELY	PATRICIA	LYNCHBURG	VA	Owen	Vic	R-2925
310500	VERDUN	WILLIAM	BELLEVILLE	IL	Owen	Tony	308400
310700	HAMONS	STEVEN	LIVINGSTON	TX	Padosn	Arthur	3682
360400	REEDER	TOMMIE	BEAUMONT	TX	Parks	Becky	308200
540500	NICHOLS	STEVE	SANTA MONICA	CA	Parmet	Nancy	2216
240700	GROVES	CATHERINE	ROYAL PALM BEACH	FL	Person	Claire	3446
410800	HARRIS	ENICE	WORTHINGTON	OH	Pettibone	Thomas	3355
132500	BRUENN	PAUL	HOLMES	NY	Pettinelli	Robert	2426
233200	SWAIN III	WILLIAM	DOTHAN	AL	Phillips	Linda	R-7389
511600	HARRISON	GREGORY	BOISE	ID	Pietroni	Joe	3154
350500	HARVELL	RICHARD	PLANO	TX	Pilotti	Nancy	2380
131000	KOLSTER	DAVID	BLOOMFIELD	NJ	Pisarski	Dorothy	5080
330900	HAUSCHILD	JIM	KEARNEY	NE	Pisciteli	Patrick	2669
132800	SOLOMINE	PAUL	MIDDLESEX	NJ	Piskor	Steve	4003
210500	HEAGEY	KEITH	BALTIMORE	MD	Pitra	Robert	3509
351400	FLOOK	STEVEN	EL PASO	TX	Pisia Fawcett	Gina	2592
240300	APPEL	DONNA	DEERFIELD BEACH	FL	Platania	Richard	2078
131900	CABRERA	JESUS	NANUET	NY	Potter	Deborah	5073
330100	COMPTON	KIP	BETTENDORF	IA	Potts	Regge	3193
360100	HERRING	WILLIAM	HOUSTON	TX	Press	Elizabeth	2061
431000	MARIEN	ROBERT	INDIANAPOLIS	IN	Reardon	Christopher	3137
331500	SHURTLEFF	KIT	GODDARD	KS	Recine	Nicholas	3350
110700	MOORE	JENNIFER	READING	MA	REGION 1 TMD (Vacant)		
130600	RAMPULLA	JACK	NEW HYDE PARK	NY	Region 1 Trade Mktg Mgrs Merchandising (Vacant)		
410200	WASHINGTON	DONALD	AMELIA	OH	Region 4 Financial Analysts		
410600	MILLER	GARY	DAYTON	OH	Region 4 Financial Managers		
420900	ATTARD	GEORGINA	LIVONIA	MI	Region 4 Human Resources Generalist		
410900	OKEY	LARRY	DOVER	OH	Region 4 Human Resources Managers		
420200	RIMANELLI	LISA	LIVONIA	MI	Region 4 Managers Info. & Analysis		
421000	MITCHNER	MICHAEL	LANSING	MI	Region 4 Recruiter		
430400	RECKART	ANNETTE	HURRICANE	WV	Region 4 Trade Mktg Mgrs Merchandising		
430700	SCHULER	MARC	LOUISVILLE	KY	Region 4 Trade Mktg Mgrs Promotion		
431300	WALLACE	NANCY	MARSHALL	IL	Region 4 Trainers		
510400	ROBINSON	RUSSELL	BELLEVUE	WA	Region 5 Financial Analysts		
510600	SOARES	KENNETH	RENTON	WA	Region 5 Financial Managers		

2041883583

Source: https://www.industrydocuments.ucsf.edu/docs/xnxl0000

OCTEL NUMBER	LAST NAME	FIRST NAME	CITY	ST	LAST NAME	FIRST NAME	PHONE EXTENSION
521100	LOPEZ	ARTHUR	TUSCON	AZ	SFA		
521200	ZIKIAS	NANCY	SCOTTSDALE	AZ	SFA		
521300	BECK	GEORGE	LAYTON	UT	SFA		
521400	MCGREGOR	MELISSA	SALT LAKE CITY	UT	SFA		
521500	VAILLANCOURT	RICHARD	LAS VEGAS	NV	SFA		
530100	CLONEY	DON	SANTA ROSA	CA	SFA		
530200	LONG	LARRY	SANTA ROSA	CA	SFA		
530300	HEWLETT	THOMAS	PLEASANTON	CA	SFA		
530400	ZAPPARELLI	PATRICIA	SANTA ROSA	CA	SFA		
530500	DERNER	DOUGLAS	SAN CARLOS	CA	SFA		
530600	DILLARD	EDDIE	SAN FRANCISCO	CA	SFA		
233400	QUINN	HERBERT	COLUMBUS	GA	Shalitsky	Allen	5065
231700	MOODY	DARRELL	NASHVILLE	TN	Shelton	Barbara	3498
411600	KELLY	JAMES	MENTOR	OH	Sica	Paula	3676
222400	MARKEL	RONALD	GREENVILLE	SC	Sichelman	Fred	4012
140500	MILLER	ALLAN	WAYNE	PA	Simon	Jeff	R-2338
230200	ENGLISH	MARJORIE	STONE MOUNTAIN	GA	Simons	Renee	3282
131800	KESNER	DENIZE	MANHASETHILLS	NY	Sinha	Arun	3957
232700	KILGORE	WILLIAM	TUSCALOOSA	AL	Slavitt	Joshua	2479
412100	KILROY	EDWARD	BUTLER	PA	Slone	Michael	3394
351200	WESTER	LINDA	ODESSA	TX	Smith	Morris	309501
211000	RICHARDSON	RENEE	STAFFORD	VA	Smith	Donnie	208400
132000	KIM-ENG	KEVIN	TANNERSVILLE	PA	Smith	Willie	2857
332000	BONEY	TERRY	AMARILLO	TX	Smith	Debbie	3065
231500	SCOTT	REID	HIXSON	TN	Smith	Thomas	R-5385
311600	WOODS	JOHN	MCALESTER	OK	Smith	Debbie	L-1210
542400	KINDER	MARK	WEST COVINA	CA	Spiers	Linda	3762
140900	COUSIN	W ANDREW	OREFIELD	PA	Starr	Michael	3741
132600	BRAY	DAVID	NEWTOWN	CT	Steele	Harry	3260
530900	RODRIGUEZ	IMELDA	PLEASANTON	CA	Stern	Doran	3581
211800	RATLIFFE	LARRY	RICHMOND	VA	Stirlen	Richard	3252
111000	KING	GREGORY	STERLING	MA	Stone	Paula	3334
330600	DOUGLASS	GREGORY	OMAHA	NE	Stroud	Ron	L-1388
322100	KING	TINA	MEMPHIS	TN	Sudac	Jeffrey	2134
541400	KING II	OLIN	VICTORVILLE	CA	Sussman	Sally	3316
220300	KINSLEY JR	RONALD	HICKORY	NC	Suter	Mark	R-3533
410300	BROCK	YVONNE	CINCINNATI	OH	Suter	Norma	2153
441400	HAWLEY	BRADFORD	CHICAGO	IL	Szudzik	Jim	404100
112200	ROGOFF JR	WILLIAM	SOUTH WINDSOR	CT	Szymanczyk	Michael	3920
212200	BURGESS	BONNIE	CHESAPEAKE	VA	Tarring	Gregory	3547
233600	TUCKER	ROBERT	MARTINEX	GA	Tatar	Deborah	3126
320400	KRAMER	JOSEPH	MANDEVILLE	LA	Taylor	James	3052
361600	SATTERWHITE	ROBERT	SAN ANTONIO	TX	Teitelbaum	Shari	3395
120300	LA SALLE	THERESA	SCHENECTADY	NY	Teixeira	Linda	2449
110300	LABRIE	DAVID	BRUNSWICK	ME	Thesman	Lisa	3405
411400	JONES	WELLINGTON	CLEVELAND	OH	Thomas	Jim	3773
141500	STOFKO	JOAN	JOHNSTOWN	PA	Thompson	Alana	3888
360800	LAIR	EARL	HOUSTON	TX	Thosho	Fred	3519
350600	MANNS	MICHAEL	DALLAS	TX	Thornton	Gary	304200
420800	LANGFORD III	WILLIAM	LIVONIA	MI	Thwaites	J.C.	3423
120600	LAROSE	FRANK	EAST SYRACUSE	NY	Trach	Barbara	2864
111900	LAVIN III	JOHN	FEEDING HILLS	MA	Tran	Dan	3429
510500	LACKEY	CHAD	BELLEVUE	WA	Trojanowski	John	3360
133100	LEONE	CHARLES	EDISON	NJ	Tucker	Caroline	2594
540800	LEVINE	LINDSEY	SANTA MONICA	CA	Tucker	James	2367
511000	SMITH	MELANIE	VANCOUVER	WA	Turner	Jonathan	3593
232200	ZIMMERMAN	RAYMOND	MUSCLE SHOALS	AL	Turner	Joel	R-3232
310800	LINDER	RICHARD	SPRINGFIELD	MO	Turo	Robert	2564
131300	CICCHELLI	ANTHONY	MAHWAH	NJ	Valenti	Vikki	3537
541200	OLMOS	FRANK	RIALTO	CA	Valinoti	Margunte	2561
531200	LOH	EDWARD	SHASTA	CA	Vander Putten	James	2740
120400	SULLIVAN	RICHARD	CLIFTON PARK	NY	Venuti	Debbie	109501
112400	LOMBARDO	JAMES	SEEKONK	MA	Villani	Douglas	2877
431200	POTTERACK	JOSEPH	GREENWOOD	IN	Von Germeten	Ann	3326
361700	WILKINSON	STEVEN	CORPUS CHRISTI	TX	Walchak	Mark	2182
310100	PAGANO	GERI	ST. LOUIS	MO	Waldman	Margot	3657
330300	SELBY	AARON	DES MOINES	IA	Waltmeyer	Mickey	R-6601
210400	BERNSTEIN	JOSEPH	COLUMBIA	MD	Wallo	Steve	R-5517
351500	PETERSON	LISA	ALBUQUERQUE	NM	Watkins	Lucille	309501
242200	SHAUGHNESSY	PATRICIA	JACKSONVILLE	FL	Watson	Francis	R-2604
241300	GUEST JR	PHILLIP	TAMPA	FL	Webster	Ross	2005
510700	LYLE	MARY	OLYMPIA	WA	Wenkselbaum	Ian	3041

2041883584

Source: https://www.industrydocuments.ucsf.edu/docs/xnxl0000

2041883585

MARLBORO COUNTRY STORE

"ROUND-UP WEEK"

Source: https://www.industrydocuments.ucsf.edu/docs/xnxl0000

MARLBORO COUNTRY STORE "ROUND-UP WEEK"

WEEKS OF MARCH 7 & 14

First Steps

- NYO list of Grade 8 and above personnel was generated from HR.
- A memo was sent to all NYO Department Heads with list.
- Departments are to return the list noting participation of individuals reporting to them (by March 21, 1994).

* Completed

Source: https://www.industrydocuments.ucsf.edu/docs/xnxl0000

MARLBORO COUNTRY STORE "ROUND-UP WEEK"

WEEKS OF MARCH 21 & 28

Next Steps

- Compile NYO personnel list of participants.
- Make Unit assignments from NYO participant pool.
- Add Region personnel planning to participate.
- Determine the number of people needed from Richmond and Operations to complete Unit assignments.
- Contact Mark Suter to co-ordinate the Richmond and Operations participation list.

Source: https://www.industrydocuments.ucsf.edu/docs/xnxl0000

MARLBORO COUNTRY STORE "ROUND-UP WEEK"

WEEK OF APRIL 4

Confirmation

- **Send memo to NYO participants to request confirmation (deletions only).**

Source: https://www.industrydocuments.ucsf.edu/docs/xnxl0000

MARLBORO COUNTRY STORE "ROUND-UP WEEK"

WEEK OF APRIL 11

Confirmation

- **Contact all Round-Up Week participants and field sales personnel via memo with Unit assignments and program details.**

Source: https://www.industrydocuments.ucsf.edu/docs/xnxl0000

MARLBORO COUNTRY STORE "ROUND-UP WEEK"

WEEKS OF APRIL 18 & 25

Re-assignment

- Handle cancellations and replacement requests.
- Participants contact Unit Manager via E-Mail, Octel or telephone to plan travel arrangements, (i.e. motel, car, etc.)

Source: https://www.industrydocuments.ucsf.edu/docs/xnxl0000

MARLBORO COUNTRY STORE "ROUND-UP WEEK"

WEEK OF MAY 16

Send-Off Week

- Send out final communication to participants with any reporting instructions and program objectives.
- New York gathering of all Round-Up Week participants.
- Richmond meeting to kick off Round-Up Week.

Source: https://www.industrydocuments.ucsf.edu/docs/xnxl0000

MARLBORO COUNTRY STORE "ROUND-UP WEEK"

WEEK OF MAY 23

Round-Up Week

- **Travel to assignments Monday morning and work in the field Monday afternoon, Tuesday, Wednesday and Thursday morning. Attend Unit meeting Thursday afternoon.**
- **Travel home Thursday afternoon.**

Source: https://www.industrydocuments.ucsf.edu/docs/xnxl0000

April 28, 1994

RETAILER REWARDS PROGRAM

Overview

Retailer Rewards is a program that rewards Retail Master Accounts with Marlboro Country Store (MCS) merchandise.

Similar to Aisles for Miles, retailers receive points for POS displayed in their store. A key difference, however is that the Retailer Rewards program has additional ways to earn points. One way is when a consumer places an order from a MCS catalog obtained at retail, the participating retailer earns points. Retailers can keep catalogs available by calling 1 800 577-3777 to order more catalogs.

The more points a retailer accumulates, the more valuable the merchandise that can be ordered. Retailers are encouraged to sign up early, display MCS POS and stock catalogs. The program runs the duration of the MCS promotion.

Objectives

- Encourage Retail Master Accounts to partner with PM
- Encourage placement of POS
- Maintain catalog availability at retail
- Sustain promotional presence at retail

Program Highlights

Timing:	May 1994 - February, 1995
Scope:	National
Penetration:	Retail Master Accounts
Offer:	Redeem points for merchandise
Participation:	Retail Master Accounts (112,000)
	Direct store shipment
	Sign up participation

Program - Front End

A sell sheet detailing the Retailer Rewards program with a sign up card is provided to the field sales force in the Marlboro Country Store introductory package, the week of March 7, 1994. (Additional sell sheets can be ordered via The IVR system.) Sales representatives present the Retailer Rewards program to Retail Master Accounts during the March/April MCS sell-in. Retail Master Accounts must sign up in order to participate in the program. Stores can participate at a store level or at a chain headquarters level.

Retail Master Accounts that initially sign up for the program receive 3,000 start up points. In order to maximize participation, another sign up postcard may be mailed in July, to Retail Master Accounts that have not signed up for the program. Retail Master Accounts that sign upon or before July 1, receive 3,000 start up points. Retail Master Accounts that sign up between July 2, and September 1, receive 1,000 points. After that time, Retail Master Accounts can sign up but will not receive start up points. Retail Master Accounts can request a sign up form by calling 1-800 577-3777.

2041883593

Source: https://www.industrydocuments.ucsf.edu/docs/xnxl0000

In addition to the start up points, Retail Master Accounts can earn points by displaying MCS POS. Sales representatives have a POS checklist that awards points for every piece of material placed in the store. Sales representatives record the POS material, mail the postage paid card and the points are credited to the store. Sales representatives fill in the store's address and retail control number even if a chain is participating at the headquarters level.

POS points are awarded at specific times throughout the MCS promotion, in May/June, in August/September and in October/November. In May/June, Retail Master Accounts can receive up to 25,000 points by placing the following materials at retail:

Item	Points
B4G1F Display	10,000
Banner	7,000
Poster	5,000
Other POS	3,000

The third way that Retail Master Accounts can earn points is by keeping MCS catalogs available for customers. Catalogs issued to Retail Master Accounts have an OCRA code that links a consumer order back to the store where the consumer picked up the catalog. Retail Master Accounts receive 1,000 points for every consumer order made from a catalog distributed at their store. When retailers are close to running out of catalogs, they call 1 800 577-3777 to order more catalogs. All retailers can call the retail 800 number to reorder catalogs. Catalogs will be sent to the store within two weeks.

Participating Retail Master Accounts receive 2 statements. The statements are issued in August and at the end of the program. Each statement details the number of points that a participating Retail Master Account has accumulated. Retail Master Accounts use the order form located on the statement to redeem the points for merchandise. The points can be redeemed anytime after the first statement is issued. Retail Master Accounts can request additional order forms via the retail 800 number.

The merchandise available and the points required to redeem are:

Item	Points Required
Brand M Cap	5,000
Marlboro Brass Lighter:	10,000
Marlboro Denim Shirt	25,000
Leatherman Tool	50,000
Marlboro Barn Jacket	75,000

Accordingly, a Retail Master store with 75,000 points has several ways to redeem the points. The participating store can order a Marlboro Barn Jacket or a Marlboro Denim Shirt and a Leatherman since both items total to 75,000 points. The store cannot request 15 Marlboro Caps since a participating retailer cannot receive more than 3 items per store, during the length of the Retailer Rewards program. Chain account orders are based upon the number of stores in the chain. For example, a chain with ten stores participating at the headquarters level can order a maximum of thirty items.

Participating retailers complete and mail the order form to Neo Data. The request is fulfilled, and the merchandise is sent to the retailer. The Retailer Rewards program ends two months after the last MCS consumer order is accepted.

2041883594

Source: https://www.industrydocuments.ucsf.edu/docs/xnxl0000

Program - Back End

Sell Sheet

Program details and available merchandise are provided in a Retailer Rewards sell sheet. The sell sheet includes a postage paid sign up card and instructs retailers to call 1 800 577-3777 before they run out of catalogs. Sales representatives can order sign up cards via the IVR system (kit #76722).

Program Participation

Retail Master Accounts must sign and return the form on the sell sheet to participate in the program. Retailers must indicate whether they are participating at a store level or at a chain headquarters level. The postcard is mailed to a Tempe, Arizona P.O. Box and forwarded to Neo Data who records and maintains a list of participating retailers. A list of accounts participating at the chain headquarters level is forwarded to the PM sales organization for verification.

Retailer Reward sell sheets are available at Neo Data in the event that retailers inquire about signing up. Retail Master Accounts may sign up at any point during the promotion. CSRs verify that the stores is not already participating at the chain level before sending a sign up card. Non Retail Master Accounts are instructed to contact their sales representative for information on becoming Retail Master Accounts. Signatures are archived by Neo Data as proof of participation.

Sign up Mailing (Neo Data-Des Moines)

A sign up mailing to Retail Master Accounts may occur in July depending upon the number of Retail Master Accounts that have signed up. Neo Data will issue the mailing. Retailer Masters who have signed up will be excluded from the mailing.

Consumer Order Form Tracking (Neo Data-Ireland)

Data entry occurs after verification so that only valid consumer orders are credited to a retailer. The OCRA code is recorded and linked back to the retailer that received the sequence of coded catalogs.

Catalogs (Madden)

All catalogs are either coded or non coded. Coded catalogs are sent to Retail Master Accounts and non coded catalogs are sent to non Retail Master Accounts. Coded catalogs have an 8 digit, zero filled, OCRA code printed on the back panel. The OCRA code is located in a 1-5/8" x 5/8" white box situated perpendicular to the spine.

Two catalog versions (deluxe and mini) are distributed during the promotion. Mini catalogs are distributed via the retail 800 number while deluxe catalogs are distributed with POS materials via the IVR system. Both catalogs contain all the MCS items and a consumer order form.

Retailer Database Management (Richmond)

PM Richmond provides Neo Data-Boulder with nightly updates to the retail database based upon the SPACE database. The retail database, located at Neo Data-Boulder, contains a chain affiliation and headquarters address in the event that a chain elects to participate at the headquarters level. CSRs have the ability to verify on screen whether a chain is participating at the store level or at headquarters level.

May Phase I (PMExpress)

Sales representatives order separate POS kits for Retail Master Accounts and non Retail Master Accounts via the IVR System at PMExpress. Coded catalog are included in the POS kit for Retail Master Accounts and non coded catalogs are included in the POS kit for Non Retail Master Accounts. The kit number for Retail Master Accounts is #76574 while the kit number for Non Retail Master Accounts is #76606. PMExpress tracks the OCRA code and records the name, address and retail code of the Retail Master Account receiving the Retail Master kit.

Coded catalogs can only be sent as a direct store shipment. Depots and warehouses receive non-coded (non Retail Master kits) since the stores ultimately receiving the catalogs cannot be tracked. The IVR system is programmed to prevent Retail Master kits from being sent to depots.

2041883595

Source: https://www.industrydocuments.ucsf.edu/docs/xnxl0000

Data Transmission (Madden to Neo Data-Boulder)
Madden transmits phase I shipment information weekly (on Friday) to Neo Data-Boulder via the network through Richmond. The information includes total number of records sent, retailer control number, store address and catalog codes.

Phase II and Phase III Transmissions (Madden to Neo Data-Boulder)
Subsequent transmissions are necessary in August (phase II) and in October (phase III) as catalogs are distributed during both phases. Similar to May, sales representatives order coded catalog kits for Retail Master Accounts and non coded catalog kits for Non Retail Master Accounts via the IVR System.

POS Points (Neo Data-Tempe)
Sales representatives, record the POS materials seen at retail on a postage paid postcard and mail in the card. The postcards are forwarded to Neo Data-Tempe and the participating retailer is credited with the points. POS checklist cards occur in three waves, May/June, August/September and October/November. Only one POS checklist card is accepted per store during each wave. The first POS checklist card is valid until July 31, 1994.

Catalog Orders 1 800 577-3777 (Neo Data-Tempe)
All retailers can order catalogs and take one holders by calling the retail 800 number. Callers .. at are not retailers, are instructed to call 1-800-Marlboro. Retail callers provide their 6 digit retail number for verification. If retailers are not aware of their retail number, zip code, phone number and address are used to access the retailer control number.

Consumer service representatives differentiate between Retail Master Accounts and Non Retail Master Accounts. Retail Master Accounts receive coded catalogs and non Retail Master Accounts receive non coded catalogs. Scripts have been written to anticipate retailer questions and concerns.

Two separate catalog limitations exist, one per telephone call and the other over the life of the program. Both limitations are flexible and can be modified throughout the life of the program. During an individual telephone call, retailers with a CPW from 1-499 can order 1 box of catalogs (50 catalogs) while retailers with a CPW equal to or greater than 500 can order up to 2 boxes of catalogs (100 catalogs). Catalog orders are being monitored to determine when the limitation needs to be modified. Currently, a retailer may order catalogs up to 20 times during the program. When 8MM catalogs have been distributed, a new limitation may be implemented based upon the number of retail callers using the retail 800 number to request catalogs.

Catalog Fulfillment (Neo Data-Des Moines)
Catalog orders are fulfilled such that a retailer receives catalogs within two weeks. The catalog codes and retailer information is entered into the retail database before the catalogs are sent to the retailer.

Statement Generation/Mailing (Neo Data-Des Moines)
Retailer statements detailing total accumulated points are generated in August and at the end of the program. Statements are only issued to Retail Master Accounts who have completed a participation form and have points. Chain accounts participating at the headquarters level will receive a statement at the headquarters address.

Reward Claims (Neo Data-Des Moines)
The bottom portion of the statement contains a rewards claim form. Extra claim forms can be requested through the retail 800 number. Once an order is processed the points are deducted from the account. Awards can be claimed at any time after the first statement in August. CSRs can access an account if a retailer calls and inquires about number of points accumulated to date.

2041883596

Source: https://www.industrydocuments.ucsf.edu/docs/xnxl0000

Reward Fulfillment (Neo Data-Des Moines)
A retailer (retail location) may order up to three items during the life of the program. Chain accounts participating at the headquarters level can order according to the number of stores in the chain. A store with 5 stores can order a total of 15 items during the life of the program. A form letter is issued if a retailer exceeds the item limitation. Retailers are instructed to allow 10-12 weeks for delivery. The five items that a retailer can redeem points for are:

Item	Points Required
Brand M Cap	5,000
Marlboro Brass Lighter:	10,000
Marlboro Denim Shirt	25,000
Leatherman Tool	50,000
Marlboro Barn Jacket	75,000

Forecast (Purchasing)
The items for the Retailer Rewards program are the same items as available to consumers. The items must be available at Neo Data-Des Moines by early July since statements are sent to retailers in August, and Retail Master Accounts can redeem points after the initial statement. The quantities detailed below are in addition to the consumer forecast:

Item	Quantity Forecast
Brand M Cap	38,500
Marlboro Brass Lighter:	41,800
Marlboro Denim Shirt	35,400
Leatherman Tool	6,200
Marlboro Barn Jacket	12,600

Reporting (Market Research)
Weekly and monthly status reports will be issued. Areas of interest include catalogs ordered, retailer sign up, accumulated points by vehicle (sign up/POS/catalog), orders redeemed, merchandise redeemed and items fulfilled. Non Retail Master information may be desired as a control variable on a less frequent basis.

Timing (All Parties)
The Retailer Rewards program officially starts May 1, 1994. All elements of the program must be tested and in place by April 18, 1994. A recorded message is installed by February 28, 1994 in the event that a retailer calls 1 800 577-3777 to inquire about the program.

2041883597

Source: https://www.industrydocuments.ucsf.edu/docs/xnxl0000

RETAILER REWARD KEY INFORMATION

FACTS				
Total Retail Stores 1993				216M
Retail Master Stores				112M
Non Retail Master Stores				104M
Total CPW 1993				45MM
Retail Master CPW				27MM
Non Retail Master CPW				18MM
Catalog Mix (Actually Distributed)				
	MAT	%	MCS	%
Retail	115.0MM	72%	48.0MM	50%
Media	27.0MM	17%	28.0MM	30%
Direct	13.5MM	8%	9.0MM	10%
Vans Events	2.3MM	1%	1.0MM	1%
Fulfillment	2.7MM	2%	8.6MM	9%
Total	160.5MM	100%	94.6MM	100%
Retailer Participation Aisles Mile I (18,529)				16%
Retailer Participation Aisles Miles II (16,192)				14%
ASSUMPTIONS				
Total MAT orders projected				6.7MM
MAT orders to date				4.7MM
MAT orders from Retail				3.7MM
MCS orders projected				4.7MM
MCS orders from Retail				2.3MM
Retail orders from Retail Master Accounts				1.8MM
Retail Master Accounts ordering merchandise				46%
Maximum # Items Ordered per store				3
Total Deluxe Catalogs at Retail				31.9MM
Coded Deluxe Catalogs at Retail				18.75MM
Non Coded Deluxe Catalogs at Retail				13.15MM
May Phase I Allocation (100 cat/store)				25.15MM
August Phase II Allocation (50 cat/store)				6.75MM
Total Mini Catalogs for Retailer Rewards				14.9MM
Coded Mini Catalogs for Retailer Rewards				9.9MM
Non Coded Mini Catalogs for Retailer Rewards				5MM
# Boxes (50 cat/box)				298M

2041883598

Source: https://www.industrydocuments.ucsf.edu/docs/xnxl0000

RETAILER REWARD KEY CONTACTS

PHILIP MORRIS

Brand	
Nancy Parmet	(212) 878-2216
Tracy Young	(212) 880-3732
Customer Service	
Janice (212) 880-3751	
Jeanine Restivo	(212) 878-2735
Fulfillment	
Kathy McMahon	(212) 880-3847
John Trojanowski	(212) 880-3360
IS	
Reggie Potts	(212) 880-3193
Jim Royall	(212) 880-5004
IS Richmond	
Jim Conner	(804) 220-6658
Mike Dennis	(804) 220-5693
Gibson Phillips	(804) 220-6647
Bob Rice	(804) 220-3221
Frank Williams	(804) 220-6605
Logistics	
Gerard Cardillo	(212) 878-2585
Rob Huckfeldt	(212) 878-2925
Marketing Services	
Marla Antonoff	(212) 880-3911
Bruce Huffine	(212) 878-2487
Renee Simons	(212) 880-3282
Research	
Paula Sica	(212) 880-3676
Roy Whalen	(212) 880-3892
Sales	
Frank Alfieri	(212) 878-2450
Jack Mansmann	(212) 880-3342

2041883599

Source: https://www.industrydocuments.ucsf.edu/docs/xnxl0000

April 28, 1994

RETAILER REWARDS KEY CONTACTS

MADDEN	
Mary Anne Meade	(212) 880-4117
Jim Mitchie	(708) 775-3513
Art Wilkins	(708) 775-3504
MSA	
Trish Alleyne-Chin	(212) 880-3404
Lisa Bautista	(412) 362-2000
Nidhi Gangwar	(415) 362-2000
NEO DATA	
Brian Burgett	(515) 237-4087
Mike Davidson	(515) 237-4840
Rich Edwards	(515) 237-4800
Tina Kindred	(515) 237-4745
Mike Moore	(515) 237-4890
Chris Warwick	(515) 237-4744
Barb Waller	(515) 284-2092
HADLEY GROUP	
Sue Draddy	(212) 714-2550 x216
Dan Thomas	(212) 714-2550 x154

2041883600

Source: https://www.industrydocuments.ucsf.edu/docs/xnxl0000

RETAILER REWARDS FLOW CHART

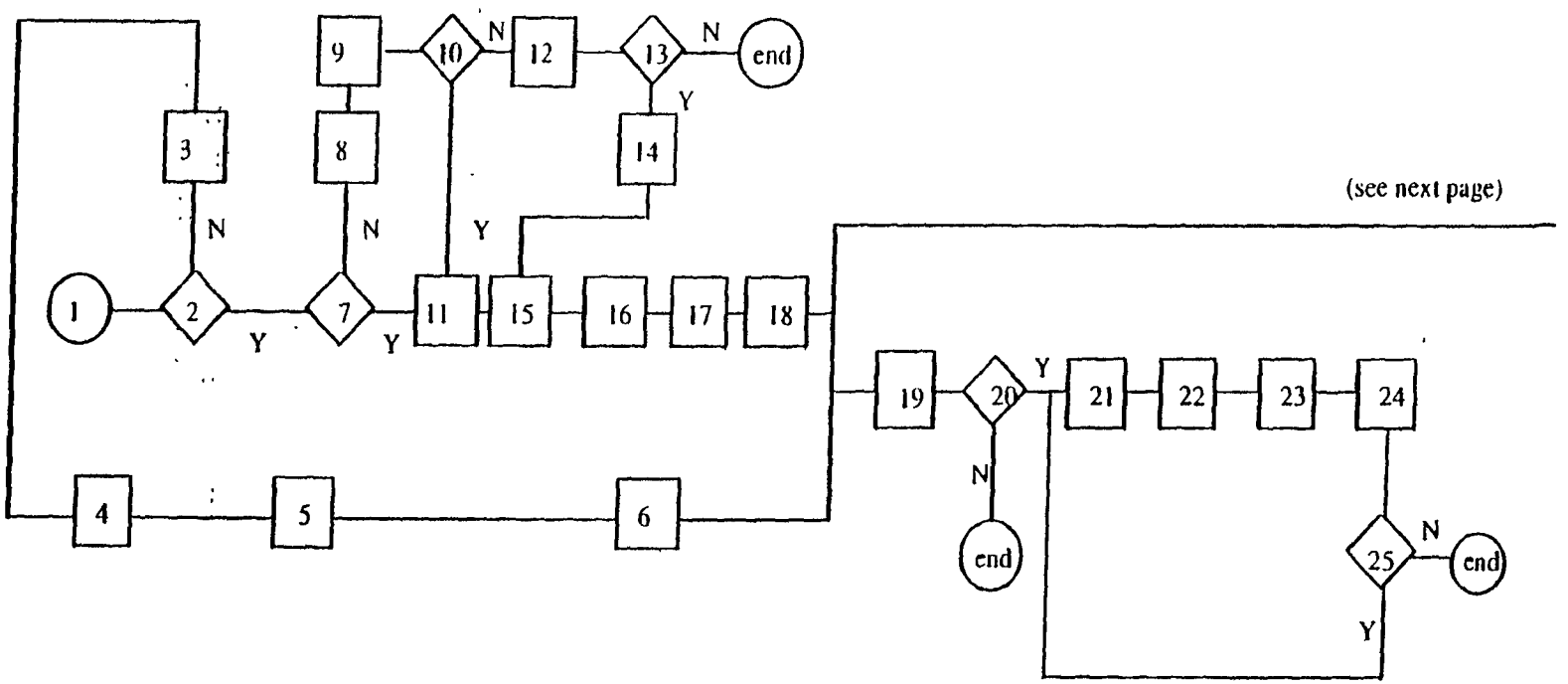

Source: https://www.industrydocuments.ucsf.edu/docs/xnxl0000

RETAILER REWARDS FLOW CHART

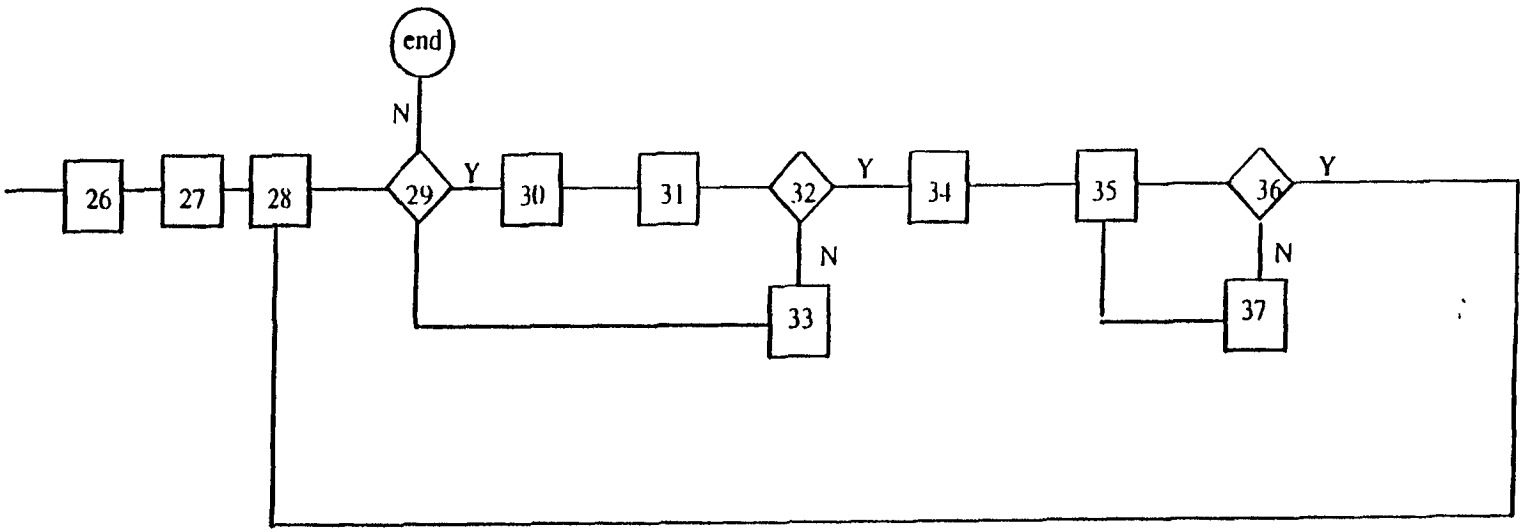

Source: https://www.industrydocuments.ucsf.edu/docs/xnxl0000

MARLBORO COUNTRY STORE

P.O.S. MATERIALS LIST

All displays come with one hanging catalog sheet on a chain, two danglers and two horizontal window posters.

40 Deal Floor Display
(15⅝" W x 55¼" H x 10¾" D)

108 Deal Floor Display
(22¼" W x 59¼" H x 10¾" D)

20 Deal Counter Display
(14½" W x 16¼" H x 12¼" D)

Window Postac (20"x 16")

Dangler
(6" x 5" without neck)

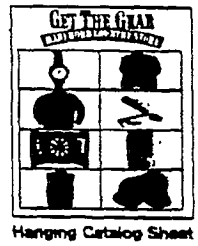

Hanging Catalog Sheet

Counter Balance Overlay Small (19½" x 32¾")
Counter Balance Overlay Large (30¾" x 50¾")

Mobile (24" x 30")

GET THE MILES
$

Vinyl Banner (3' x 4')
Vinyl Banner (3' x 9')

Pennant Rope (60' long; 32 flags)

© Philip Morris Inc. 1994

67510

2041883603

Source: https://www.industrydocuments.ucsf.edu/docs/xnxl0000

MARLBORO COUNTRY STORE

P.O.S. MATERIALS LIST

Window Posters (21"x15")

Overhead Pack Merchandiser 4' (13⅞" x 31⅜")
Overhead Pack Merchandiser 6' (13⅞" x 40⅝")
Overhead Pack Merchandiser 8' (13⅞" x 63⅞")

Catalog Take-One Box
(7⅞" W x 11¼" H x 7¼" D)

Change Mat (10½" x 15")

B-Header (47⅝" x 13⅜")

B-Strips (1½" x 22⅞")

2-Sided Static Cling (4'⅝" x 15⅛")

Other items available as follows:

- Carton Rack Fixture System 2000 1' (7⅝" x 11⅜")
- Carton Rack Fixture System 2000 2' (7⅝" x 23⅜")
- OHPM Version III (12⅜" x 24⅝")
- OHPM Rearlite Signage (13¼" x 40¼")
- OHPM New Retrofit (16⅛" x 45⅞")
- OHPM 2' (17¼" x 25¾")
- OHPM Southland (12⅜" x 32¼")

2041883604

Source: https://www.industrydocuments.ucsf.edu/docs/xnxl0000

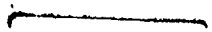

2041883605

Source: https://www.industrydocuments.ucsf.edu/docs/xnxl0000

PM/U.S.A. *Packaging Operations* No. 603

☐ PM U.S.A. **N.Y. DEVELOPMENT REQUEST** ☐ PM INT'L

☐ Revenue Packs ☐ Promotional Materials

Requested By	Date Requested: 6/21/94	Purchasing Technical Services:
Brand:		Brand #:
Comments:		

Packaging Information: ☐ Design Development ☐ Machine Test

☐ King Size	☐ Inner Foil	☐ Soft Pack	**Ink Systems**	**Paper/Board Stock**
☐ 100mm	☐ Tear Tape	☐ Flip-Top-Box	☐ _____	☐ _____
☐ _____	☐ Inner Frame	☐ Carton	☐ _____	☐ _____
☐ _____	☐ Embossed	☐ Case	☐ _____	☐ _____
	☐ Tipping	☐ Closure		

Marketing Brief:

Definition of Project Completion Date:

ESTIMATE:

TARGET COMPLETION DATE: _____

***Revised:** _____

NY PACKAGING APPROVAL _____ DATE _____

NY MARKETING APPROVAL _____ DATE _____

Budgeted? ○ **Yes** ○ **No** **Charge Code:** _____

2041883606

Source: https://www.industrydocuments.ucsf.edu/docs/xnxl0000

PM/U.S.A. *Packaging Operations* No. 4 -- 2455

PM U.S.A. ☐	**DESIGN REQUEST**	PM International ☐

Requested By:	Date Requested: 6/21/94	Assigned Design Firm:	
Brand:		Brand #:	Project Code #:
Project Name:			
Comments:			

☐ Promotional & Copy Changes 043-970 ☐ Line Extensions & Size Changes 043-971 ☐ Original & Major Design Changes 043-972

Packaging Information: ☐ Design Development ☐ Reproduction Artwork

☐ 85 mm	☐ 20's	☐ Soft Pack	☐ Face Panel Comp	☐ All Panels/CPC
☐ 100mm	☐ _____	☐ Flip-Top-Box	☐ Face, Sides & Ends	☐ For Photography
☐ _____	☐ Inner Frame	☐ Carton	☐ Working Pack	☐ Non-Working Pack
☐ Inner Foil	☐ Embossed	☐ Special Stock	☐ Tipping	☐ _____

Marketing Brief:

Authorization to proceed with project prior to obtaining written approvals? ☐

○Yes ◉No

Dsgn. No	Phase	Comments

ESTIMATE:

DUE DATE:

*Revised:

2041883607

P.O.# _____ / Line #_____

MARKETING VP / DIRECTOR APPROVAL_____ DATE_____

Source: https://www.industrydocuments.ucsf.edu/docs/xnxl0000

Philip Morris U.S.A. - Continuity Promotions REVENUE ITEMS

Functional Area. R+D Functional Responsibility: PACKAGING Name: NANCY PILOTTI Page No. 1

FUNCTIONAL IMPACT CHART

Inputs	Source →	My Job →	Output	Distribution
PROGRAM/ PACKAGING CONCEPTS	BRAND	Describe scope of functional responsibility: REQUEST DESIGN STUDY 1 WEEK	WORK WITH BRAND/DESIGN FIRM TO CREATE NEW PACKAGING- COMMUNICATE PROGRAM TO COMMERCIAL DEVELOPMENT/REVIEW INVENTORY	DESIGN FIRM --- COMMERCIAL DEVELOPMENT
SUBMIT COMPS/ DESIGNS	DESIGN FIRM	REVIEW FOR PRINTABILITY AESTHETICS, WORKABILITY 1 WEEK	ASSESS/REVIEW WITH BRAND. MAKE MODIFICATIONS OR APPROVE DESIGNS	· DESIGN FIRM · PTS · BRAND
SUBMIT ARTWORK	DESIGN FIRM	DIRECT AGENCY TO CREATE ARTWORK. APPROVE/REVIEW/ MODIFY FOR PRINTABILITY > 1 WEEK	DISCUSS VARIABLES W. TH DESIGN FIRM GET BRAND FEEDBACK	· PTS BRAND
DEVELOP ARTWORK	PTS/[redacted]	REVIEW + APPROVE ALL FILMS, INK DRAWDOWNS, ETC > 6 WEEKS Time needed to complete (in weeks): 8 WEEKS	WORK WITH PTS TO MODIFY, FINE TUNE TO ACCEPTABLE GRAPHIC STANDARDS GET BRAND OK.	· PTS - BRAND
PRINT/DELIVER MATERIALS TO FACTORY	PTS/SUPPLIER			
2041883608				

Source: https://www.industrydocuments.ucsf.edu/docs/xnxl0000

PRODUCT PROMOTION

Philip Morris U.S.A. - Continuity Promotions

Functional Area: R+D Functional Responsibility: PACKAGING Name: NANCY PILOTTI Page No. 2

FUNCTIONAL IMPACT CHART

Inputs	Source →	My Job →	Output	Distribution
PROGRAM/PACKAGING CONCEPTS FOR PROMO ITEM	BRAND/AGENCY	Describe scope of functional responsibility: •DEVELOP TIMELINE •CREATE STRUCTURE EXISTING 1 DAY | NEW 2 WKS.	CONTACT PRECON, PTS, SALES SVC AND SCHEDULE PROGRAM WORK WITH BRAND/AGENCY PRECON/PTS IN DEVELOPING ACCEPTABLE STRUCTURE	BRAND AGENCY PTS/ENGINEERING PRECON SALES SERVICES PRODUCTION PLANNING
APPROVE PROMO ITEM (STRUCTURE)	BRAND/AGENCY/PTS/ PRECON	PROVIDE DIELINES TO AGENCY WITH PRINT SPECS	OBTAIN ACCURATE DIELINES FROM PTS. PROVIDE DIRECTION + SPECIFICATIONS FOR PRINT TO AGENCY	AGENCY
SUBMIT DECORATED COMPS	BRAND/AGENCY	REVIEW/EVALUATE COMP FOR PRINTABILITY WORKABILITY 1 DAY	PROVIDE DIRECTION/ ALTERNATIVES FOR PRINT/MODIFICATIONS. APPROVE COMP.	BRAND AGENCY
SUBMIT ARTWORK DELIVER ARTWORK	BRAND/AGENCY	REVIEW + APPROVE ARTWORK SPECS RELEASE ART → 6 WEEKS	RELEASE ARTWORK TO PTS FOR DEVELOPMENT. RECEIVE FILMS, KEYS, INK SAMPLES, ETC.	PTS SALES SERVICES PRECON PRODUCTION PLANNING
PRINT/TEST/DELIVER MATERIAL TO RICHMOND AND/OR FM EXPRESS	PTS/R+D	Time needed to complete (in weeks): ENSURE PRINTED MATERIALS MATCH ART, FINE LINE DETAILS	REVIEW FOR QUALITY COLOR, MAKE REQUIRED ADJUSTMENTS WITH PRINT SUPPLIER PROVIDE SAMPLES TO BRAND	PRECON, R+D, QA BRAND
~~MFG~~ ASSEMBLY (TIME VARIES ACCORDING TO QTY)	PRECON	TRACK, MONITOR ASSEMBLY PROGRESS 6 to 8 WEEKS FROM ARTWORK	REPORT ANY PROBLEMS/ DELAYS IN VARIOUS AREAS	BRAND SALES SERVICES

2041883609

Source: https://www.industrydocuments.ucsf.edu/docs/xnxl0000

2041883610

Source: https://www.industrydocuments.ucsf.edu/docs/xnxl0000

Philip Morris USA Continuity Promotions

Functional Area: I.S. *Functional Responsibility: Project Leader System Implementation* *Name: Sheila Nickert* *Page No. 1*

FUNCTIONAL IMPACT CHART

Inputs	*Source* →	*My Job* →	*Output*	*Distribution*
Purchase order	New York Purchase Department	Describe scope of functional responsibility Oversee the automation of the fulfillment process. Implement network requirements. Integrate data into other fulfillment system. • oversee data flow/integrity network • system capacity planning • requirements/specs for reporting to business groups implementation of • on-line inventory and customer fulfillment look up • automate fulfillment marketing promotions and programs Time needed to complete (in weeks). 40	Transmitted file of P.O. information	To Fulfillment House
File of product received at fulfillment house	Fulfillment House		**Transmitted file of receipts**	To Richmond - on-line success to New York
Customer orders	Keyed into system at fulfillment center		Direct marketing consumer file	- to Richmond - balancing report to Leo Bunnett - partial to need at a consolidated DB for telemarketing - files to MSA
Telemarketing/Customer Service Requests	Sitel (Telemarketing Company)		Call Sheets	Fulfillment House Philip Morris Business Groups
Drop ship info	Drop ship wholesaler		Fulfillment/Shipping Record	Fulfillment House
Cigarette fulfillment order	Consumer		Fulfillment Record Shipping Record Shipping Labels	Richmond pre-con

2041883611

Source: https://www.industrydocuments.ucsf.edu/docs/xnxl0000

Philip Morris USA Continuity Promotions

Functional Area: I.S. *Functional Responsibility: Project Leader System Implementation* *Name: Sheila Nickert* *Page No. 2*

FUNCTIONAL IMPACT CHART

Inputs	***Source*** →	***My Job*** →	***Output***	***Distribution***
New Fulfillment Program	Brand	Describe scope of functional responsibility. Oversee the automation of the fulfillment process. Implement network requirements. Integrate data into fulfillment system.	Programming Requirements/SPECS	- Fulfillment House - Any vendor/PM organization which needs data/info
		Time needed to complete (in weeks) 40		

2041883612

Source: https://www.industrydocuments.ucsf.edu/docs/xnxl0000

Database

2041883613

Source: https://www.industrydocuments.ucsf.edu/docs/xnxl0000

Philip Morris USA Continuity Promotions

Functional Area:Database *Functional Responsibility:Target Selection* *Name: Vander Putten* *Page No. 1*

FUNCTIONAL IMPACT CHART

Inputs	*Source*	*My Job*	*Output*	*Distribution*
Who was selected	Database/Brand	Describe scope of functional responsibility: - Make sure that the right people were selected	Program profile	My Group Brand
What were they mailed?	Brand	- Identify the difference between responders and non-responders - Identify what they want	Mailing Profile	My Group Brand
Who responded... and to what?	Database		Report	My Group Brand
Customer Profile	Database		Report	My Group Brand
Who else is available?	Database	Time needed to complete (in weeks): 10 - 30 weeks	Report	My Group Brand

2041883614

Source: https://www.industrydocuments.ucsf.edu/docs/xnxl0000

Philip Morris USA Continuity Promotions

Functional Area: Database *Functional Responsibility: New Offerings* *Name: Vander Putten* *Page No. 2*

FUNCTIONAL IMPACT CHART

Inputs	*Source* →	*My Job* →	*Output*	*Distribution*
Customer contacts	Telemarketing	Describe scope of functional responsibility: - Identify additional opportunities for marketing - Help build modeling file - Help structure additional offers	- Counts - Correlation of can types	My Group brand
		Time needed to complete (in weeks): Days - Weeks - Months -		

2041836 15

Source: https://www.industrydocuments.ucsf.edu/docs/xnxl0000

PHILIP MORRIS USA INTER-OFFICE CORRESPONDENCE
120 PARK AVENUE, NEW YORK NY 10017-5592

TO. Distribution DATE: February 15, 1994

FROM Ann von Germeten
Margot Waldman

SUBJECT Marlboro Country Store Sweepstakes/Tease Mailing

The following provides the program elements for the Marlboro Country Store Sweepstakes/Tease mailing. The program is scheduled to drop in the first half of March to 2.7MM MAT gear redeemers and 960M Region 5 competitive smokers.

Objectives

- Introduce the MCS look/logo to key consumers and generate excitement around the new program
- Reward MAT participants with a special advance offer.
- Encourage continuity of purpose by telling consumers to keep saving rules in the hiatus between MAT MCS.
- Improve MCS response rates and generate names in Region 5.
- Gain trial and increase alternative Marlboro purchases among competitive smokers in Region 5.
- Provide competitive smokers with a reason to continue to purchase Marlboro after coupon subsidies have been used.
- Offset anticipated volume impact of competitive free product initiatives with $3/ctn and $1 off 2 pack coupons delivered to competitive premium and discount smokers.

Elements

- Sweepstakes offer with 100 first prize winners receiving one of every MCS catalog item, and one grand prize winner also receiving the pool table.
- Entry form with RAF lighter bounceback offer (Region 5).
- 4 x $3 coupons to carton smokers
  4 x $1 off 2 packs coupons to pack smokers. (Region 5)

Audience

MAT Gear Redeemers	1,990,577
MAT Catalog Requesters	722,352
	2,712,929
Region 5 competitive	958,669
TOTAL	3,671,598

2041RP3616

Source: https://www.industrydocuments.ucsf.edu/docs/xnxl0000

Sq	Comp.	Group	IS?	Priorty	Task	Who Leads, Does*	Deliverable	To Whom	Spec?	OK'D?	Est. Days	Due	Deliv. Signoff?	Status
1	NEO	RR	Y	A	Retail Store Promotion Level indication in NCSS	Young,Fry*	Modify NCSS	Spill	Y	N	?	?		In Estimating
2	NEO	RR'	Y	A	Non Workload Orders-Allow Non-Coded Catalog Orders	Young,Fry*	Modify NCSS	Spill/Young	Y	N	?	?		In Estimating
3	NEO	RR	Y	A	Automatic Chain Enrollment-Propogate Lower level Signup	Young,Fry*	Modify NCSS	Spill/Young/Potts	Y	N	?	?		In Estimating
4	NEO	RR	Y	A	Retail Rewards Partic,Reporting-Generate 2 reports.	Young,Fry*	Modify BOSS	Young	y	N	?	?		In Estimating
5	NEO	RR	Y	B	Track 3 Waves of POS i	Young/Fry*	Modify NCSS	Young/Spill	Y	N	?	?		In Estimating
6	NEO	RR	Y	B	Improve RR Data Presentation on CSR Screens	Spill/Fry*	Modify NCSS	Spill	Y	N	?	?		In Estimating
7	NEO	DB	Y	B	Allow "add me" screens to CSR's and interface to Richmond/Kowal	Spill/Potts/Fry*	Modify NCSS/Interfaces	Spill/Potts	Y	N	?	?		In Estimating
8	NEO	RR	Y	B	Allow RETAILER Change of Address to CSR's and interface to Richmond	Spill/Potts/YOung/Costello*?	Modify NCSS/INterface	Spill/Potts	Y	N	?	?		In Estimating
9	NEO	CS	Y	C	Training DB for Sitel	Spill,Fry*	Estimate	Simons	NR	N	?	?		Waiting Estimate
10	NEO	CS	Y	B	2% shipping sample for Kowal to perform cust satisfaction	Spill,Fry*	Finished Tape	Spill/Simons	Y?	N	?	?		Waiting Completion?
11	NEO	CS	N	A	Procedure for tracking all outages, downtime in CSR network	Potts/Warwick*	Procedure,Report	Simons	NR	N	?	?		In progress?
12	NEO	CS	N?	A	Move 2-2 30 downtime CSR window.	Potts/Warwick*	Feasibility	Simons	NR	N	?	?		In progress?
13	NEO	CS	Y?	A	Correct call volume reports (CMS), add utilization reports	Costello*	Revised/New/recast repor	Spill	Y?	N	?	?		In progress?
14	NEO	CS	N	A	Provide internal monitoring procedure document	Costello*	Procedure	Simons/Spill	N	N	?	?		In progress?
15	NEO	CS	Y	A	Estimate effort for Region 5 Refer a Friend promotion	Warwick*	Estimate	Simons	Y	N	?	?		In progress?
16	NEO	CS	Y	B	Scope and estimate Hispanic CSR group and implementation Costs	Warwick*/Costello	Estimate	Simons/Spill	N	N	?	?		In progress?
17	NEO	CS	Y?	C	Estimate IVR capability for automatically giving out Retailer points without CSR intervention	Toby*	Estimate	Simons/Young	N	N	?	?		In progress
18	NEO	CS	N	A	Complete Move of PM to other part of Phoenix Building	Costello*	Target Date and Contingency Plan	Spill	N	N	?	?		When?
19	NEO	OE	N	A	Complete Capacity Analysis Worst Case Scenario for Ireland Mail,Shred,Microfilming,Audit, Transmit stages	Christiansen*	Capacity Impact Plan	Huffine	N	N	?	17-Jun		In progress
20	NEO	DIST	N	A	Complete Capacity ANalysis Worst Case Scenario for Receiving,Staging,Fulfillment Lines and Shipping stages	CHristiansen*	Capacity Impact Plan	Huffine/Suter	N	N		17-Jun		In progress
21	NEO	DIST	N	B	Verify completion date of 2 receiving doors at 3811 warehouse	Christiansen*	Date, Plan	Huffine	N	N		15-Jun		Waiting on City
22	NEO	DIST	N	A	Establish Late Delivery Early Warning Report from Tina to Purchasing	Trojanowski/Kindred*	Report Initiated	Trojanowski	N	N	?	?		Call Tina and Discuss
23	NEO	OE	Y	B	Determine feasibility of downloading selected Ineligible correspondence to Contact History File	Simons/CHristiansen*	Feasibility/Estimate	Simons	N	N	?	?		

2041883617

Source: https://www.industrydocuments.ucsf.edu/docs/xnxl0000

Sq	Comp.	Group	IS?	Priority	Task	Who Leads, Does*	Deliverable	To Whom	Spec?	OK'D?	Est. Days	Due	Deliv. Signoff?	Status
24	NEO	OE	Y	A	Determine retroactive 'SHIP ALONE" capability of system	Simons/Christiansen*	Feasibility, Timing	Simons	NR	N	?	13-Jun		In progress
25	NEO	SYS	N	B	Publish Mainframe and Distributed Disaster Recover plan and Test Schedule	Royall/Christiansen*	Document, Schedule	Royall	NR	N	?	?		When?
26	NEO	SYS	Y	A	Investigate DUPE ID problem in MSA interface	Potts, Fry*	Conclusion , Resolution	Potts	NR	N	?	?		When?
27	NEO	OE	N	A	Produce Mail Counts by PO Box in Ireland	McMahon, O'Sullivan*	Daily Report	McMahon	N	N	?	?		At Conference call, Layout
28	NEO	SYS	N	A	Verify all Daily Count Reports	McMahon,Fry*	Schedule, Samples	McMahon	N	N	?	?		In Progress
29	NEO	SYS	Y	A	Verify all Weekly Reports	McMahon,Moore,Fry*	Schedule, Samples	McMahon, Moore	N	N	?	?		In Progress
30	NEO	SYS	Y	A	Verify all Monthly Reports	McMahon, Huffine,Fry*	Schedule, Samples	McMahone, Hecht	N	N	?	?		In Progress
31	NEO	OE	N	A	Produce MAT vs MCS mile Analysis	McMahon, O'Sullivan*	Produce Report per Schedule	McMahon, Berenson	N	N	?	?		Need Layout
32	NEO	OE	N	A	Establish Top 25 redeemer program in Ireland to catch source documents	McMahon, O'Sullivan	Procedure and Implementaion	McMahon/ VanderP	N	N	?	?		Need List, Procedure
33	NEO	OE	Y	A	Analyze, Estimate, Schedule and Implement Serial # checking in Ireland	McMahon,Reese, Warwick*	Estimate & Schedule	Simons/Floam	Y	N	?	?		Procedure written by Huffine
34	NEO	FIN	N	B	Establish Postal Account Procedures, Replenishment	Larcerra, Warwick*	Produce Procedure	Floam	NR	N	?	?		Phone call ..
35	NEO	MAT	Y	A	"B" letter production and mailing	Haesche, Warwick*	When?	Piskor	NR	N	?	?		WHEN???
36	NEO	MAT	Y	A	"20 item letter series". Produce and Mail	Haesche,Evantz,Enskat,Warwick*	When?	Piskor	NR	N	?	?		WHEN????
37	NEO	MAT	Y	A	"20 week" series Document Specs and execute	Haesche*,McMahon,Evantz,Enskat,Warwick	Detail Sched. and Specs	Team	N	N	?	?		Scheduled date complete
38	NEO	CS	N	B	Pool Table list for checking abusers	Simons, Costello*	Alpha Listing	Briggs, Simons	NR	N	?	?		WHEN???
39	NEO	FIN	N?	B	Set up standard Deposit Reconciliation Procedure	Laurence, Waller*	Procedure, Samples	Laurence	NR	N	?	?		Use May as test of procedure
40	NEO	DIST	N	B	Expansion of Washington Street Reception/ staging area	Christiansen*, Huffine	Schedule of Completion	Huffine, Suter	NR	Y	?	?		When will be complete
41	NEO	SYS	Y	B?	Data forwarding to Richmond & not Forwarded	Simons?	Position paper	Simons	N	N	?	?		Renee to explain
42	NEO	SYS	Y	B?	1st or 2nd Redeemers	Simons?	Position paper	Simons	N	N	?	?		Renee to explain
43	NEO	RR	Y	B?	Audit Trail for Retailer Reward Points	Young, Potts, Fry*	Feasibility and Estimate	Young	N	N	?	?		Feasibility, Need functional requirements
44	NEO	DIST	Y	B	Streamline Receiving Posting and M&D maintenance requirements	Duane, Kindred, Fry*	Specification	Duane	N	N	?	?		Determine need
45	NEO	DIST	Y	C	Put 48 Hr receiving Schedule/Log On-line for PM	Duane, Kindred*	SPecification	Duane	N	N	?	?		Determine cost, feasibility
46	NEO	SYS	N	A	Additional Terminal in Research Area	Potts, Whalen, PM*	Due Date, Funding	Whalen	N	N	?	?		When installed
47	NEO	CS	Y	B?	Need to capture OCR codes from source documents and pass to Richmond	McMahon, Warwick*	Feasibity, Estimate	McMahon	N	N	?	?		Discussed verbally only
48	NEO	SYS	Y	A	Re-cast and align 10% sampling errors that were introduced into MSA	Potts,Evantz,Fry*	Fix	Whalen,Potts	NR	N	?	?		When

2041883618

Source: https://www.industrydocuments.ucsf.edu/docs/xnxl0000

Sq	Comp.	Group	IS?	Priorty	Task	Who Leads, Does*	Deliverable	To Whom	Spec?	OK'D?	Est. Days	Due	Deliv. Signoff?	Status
49	NEO	RR	Y	A	Complete full featured data transmission to Madden for RR Catalog orders	Potts, Fry*	Complete tested system and operational	Potts, Young	NR	N	?	17-Jun		
50	NEO	SYS	N	A	Establish Communication, Escalation Proceudres, Contacts, and Phone Numbers	Warwick*, Simons	Esclation Directory	Simons	NR	N	?	15-Jun		
51	NEO	DIST	Y	B	Establish Cross Reference of PM Part Numbers to Neo Part Numbers for Interfaces on PO/Receipts	Nickert, Fry*, Duane	Specification, Schedule	Duane, McMahon	N	N	?			Document may exist for spec
52	NEO	SYS	N	A	Develop complete Report Summary of all reports, status, owner, and distribution	McMahon*, Spit, Dibiasi, Warwick	Updated List	Team	NR	N		13-Jun		In Progress
53	NEO	MAT	N?	A	Establish Procedures for Undliverables on all MAT mailings	McMahon, Warwick*	Procedures and Testing Plan	McMahon, Murphy	NR	N		15-Jun		In Progress with conference call
54	NEO	CS	Y?	A	Verify completeness of Consol. Order Database	Kowal, Barnes, Warwick*	Rationalize 6 sampled complaints with findings	Team	NR	N		15-Jun		Need coordinated reconciliation
55	NEO	CS	Y	A	Investigate Sitel Response Problems	Nickert*, Warwick, Sitel	Analysis Report, Next steps	Team	NR	N		15-Jun		
56	NEO	SYS	Y	B	FTP Communications between Richmond and BOulder	Nickert*, Rice, Fry*	Completed, Tested Link	Team	NR	N				

Company=Who Principally owns the project. Typically segregates vendors, or PM signifies PM or multi vendor Assignment

PM, CRI, NEO, RICH, MSA, etc

Group=What is major subject area being addressed

CS=Customer SErvice

DIST=Distribution

OE=Order Entry, Mail, Front End

SYS=Pure systems problem

IS?=Does this involve programming at the vendor or within PM?

Y=yes, it's on the technical work program

N=No, this is a business, procedural task only.

Priority=Level of Importance within the resources that can complete the task.

A=Do today, time critical, can get additional resources based on ROI

B=Do within available resources ASAP-cross subject matter/expertise to get resources if necessary.

C=Do with available resources after B's, no intermix of departmental/subject matter expertiso/assignments

D=Placeholder for something in intangible future

Task-Reasonably short explanation. Fuller explanat

Who Does

This is All Team Members, with Primary Leader as first person

Person Responsible for Real Work is astericked.

Deliverable

What is final product

To Whom

Who is responsbble for ultimate review and signoff

Spec?=Is Specification Required?

Y-Yes it is required, and is completed

N-Yes it is required, but not completed

2041R8361?

Source: https://www.industrydocuments.ucsf.edu/docs/xnxl0000

Sq	Comp.	Group	IS?	Priorty	Task	Who Leads, Does*	Deliverable	To Whom	Spec?	OK'D?	Est. Days	Due	Deliv. Signoff?	Status
									NR-No, it is not required					
										OK'D=Is it initialled approved by Person Doing,				
											and Person Receiving for getting deliverable			
										Y=Yes, jointly approved				
										N-No, not jointly approved yet				
											Est.Days=Number of Man-Days Effort			
												Due=Deliverable Due for Signoff		
													Deliv Signoff?-Approved by Usor	
													Y=Yes, signed off and Proj.Complete	
													N=Not approved yet.	
														Status=Exceptions to Report

Source: https://www.industrydocuments.ucsf.edu/docs/xnxl0000

MARLBORO COUNTRY STORE FULFILLMENT

OBJECTIVE:

- TO FULFILL A QUALIFIED CONSUMER ORDER WITHIN 2 WEEKS OF RECEIPT OF THAT ORDER

- TO PROVIDE CUSTOMER SERVICE SUPPORT TO OUR TELEMARKETING FUNCTION

2041883621

Source: https://www.industrydocuments.ucsf.edu/docs/xnxl0000

PHILIP MORRIS FUNCTIONAL PROCESS FLOW

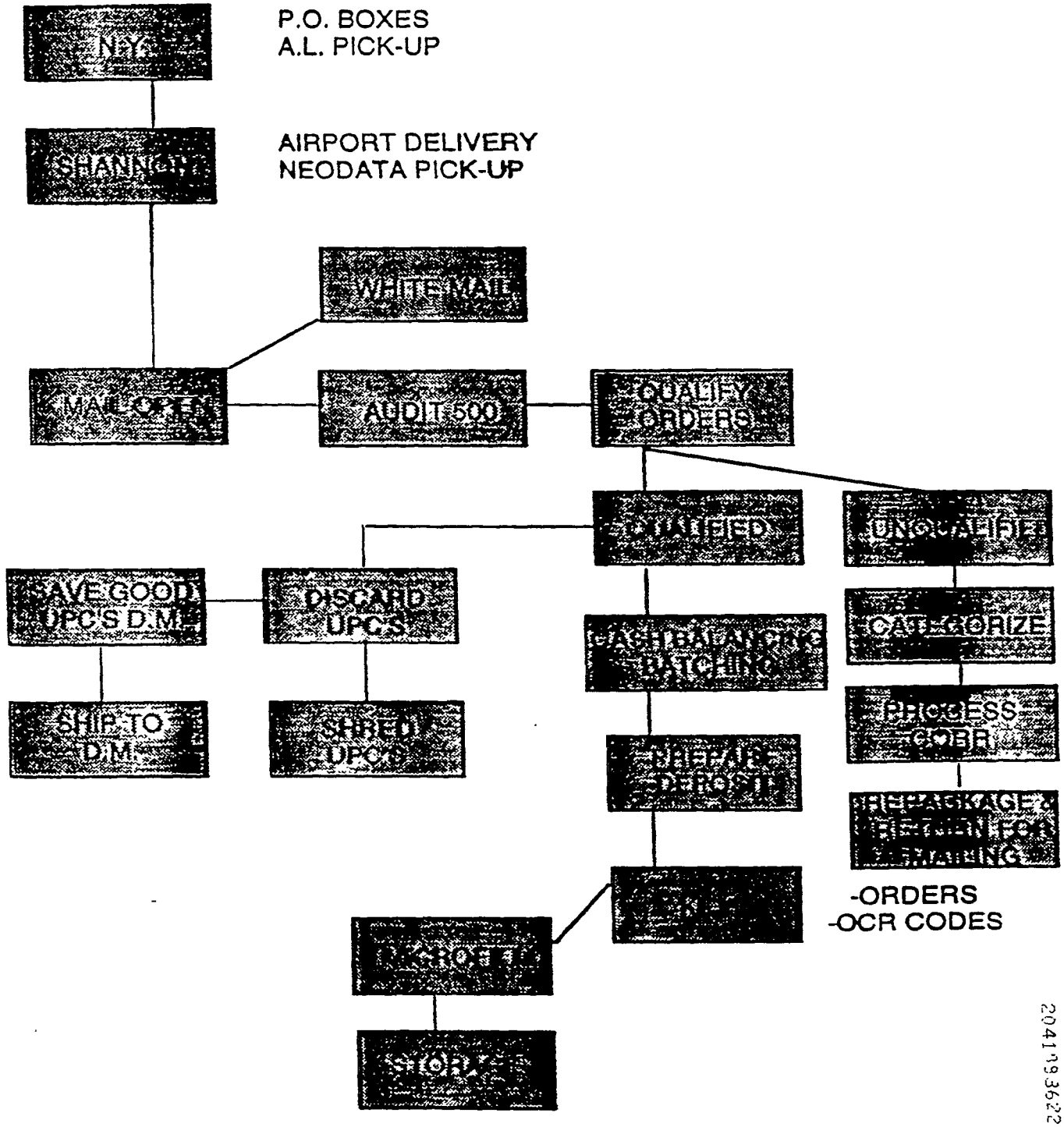

2041193622

Source: https://www.industrydocuments.ucsf.edu/docs/xnxl0000

MCS CONTINGENCY PLAN FOR BACKORDERS

- CURRENTLY WE SEND DELAY LETTERS, AT THE 10TH WEEK OF A CONSUMERS ORDER

- SUGGEST REDUCING THAT TIME LAG FOR MCS. DELAY LETTER TIMING WILL BE DETERMINED ONCE ALL DELIVERY SCHEDULES ARE AVAILABLE

- SORRY PACKAGES THAT INCLUDED A T-SHIRT WERE SENT TO 500M MAT RESPONDERS WHO HAD WAITED 12 WEEKS TO RECEIVE THEIR MERCHANDISE

  THIS GENERATED ABOUT 200 PHONE CALLS FROM CONSUMERS WHO WANTED TO KNOW "WHERE'S MINE"?

- ALTHOUGH A GIFT MIGHT BE THE PREFERRED WAY TO SAY "SORRY", I'D RECOMMEND A PAPER RESPONSE. USE THE MONEY SPENT ON THE GIFT FOR AIR FREIGHT ON YOUR LATE MERCHANDISE

.04188363

Source: https://www.industrydocuments.ucsf.edu/docs/xnxl0000

MCS REPORTING

NEODATA WILL BE PROVIDING DAILY AND WEEKLY DATA FOR PHILIP MORRIS

DAILY ON LINE IN THE NYO

- ON HAND INVENTORY
- ORDERS PROCESSED
- MAIL COUNTS
- PO RECEIPTS
- QC STATUS

WEEKLY TRANSMISSIONS TO MSA, RICHMOND DATABASE & LEO BURNETT

- MARKET RESEARCH WILL BE ISSUING ANALYSIS BASED ON THIS DATA

- TM/CUSTOMER SERVICE WILL ALSO BE PROVIDING WEEKLY CONSUMER SATISFACTION SURVEY RESULTS AND CALL CONTENT REPORTS

2041983624

Source: https://www.industrydocuments.ucsf.edu/docs/xnxl0000

2041883625

Source: https://www.industrydocuments.ucsf.edu/docs/xnxl0000

FULFILLMENT
Setting It Up Right To Meet Our Consumer's Expectations

Step 6

2041883626

Source: https://www.industrydocuments.ucsf.edu/docs/xnxl0000

Fulfillment Information Form and P.O. Box Request

Use this form to provide the basic required information about a program. Upon receipt of complete information, a P.O. Box number will be assigned.

Prepared By: _____ Date Ordered: ____/____/____

FIM Marketing and Bar Code should be sent to:

Name: _____ Address: _____

Company Name: _____ City/State/Zip Code: _____

Required Program Information: Provide ALL of the information requested below.

Brand: _____

Program Name/Description: _____

Program Drop Date: ____/____/____ Program Expiration Date: ____/____/____ Total Redemption Rate: _____

Type of Inbound Mail:
- ☐ Consumer Pays Postage
- ☐ BRC
- ☐ BRE - 1 oz. or less
- ☐ BRE - 2 oz. or less (more than 1 oz.)

Consumer Package to be Sent:
- ☐ Third Class
- ☐ UPS

Total Circulation: _____

Distribution: On Page ☐ Tip-In ☐ Other ☐

Method	Circ.	Est. Redemp.	P.O. Box Assigned	Source Code	Magazine Name	Circ.	Est. Redemp.	P.O. Box Assigned	Source Code
Direct Mail	____	_____	_____	____	_____	____	_____	_____	____
FSIs	____	_____	_____	____	_____	____	_____	_____	____
On Pack	____	_____	_____	____	_____	____	_____	_____	____
On Carton	____	_____	_____	____	_____	____	_____	_____	____
1 - 800	____	_____	_____	____	_____	____	_____	_____	____
POS	____	_____	_____	____	_____	____	_____	_____	____
Other	____	_____	_____	____	_____	____	_____	_____	____

Use the following address for consumer responses:

_____

_____

_____

_____

Use the following address for undeliverable mail:

_____

_____

_____

_____

Prepared By: _____ Date: ____/____/____

2041883627

A separate Page 2 is Required for EACH Fulfillment Item Offered

#4002 FRONT
PM USA/REV. 5/94

Source: https://www.industrydocuments.ucsf.edu/docs/xnxl0000

Fulfillment Information Form and P.O. Box Request

Date: ____/____/____

Program Name/Description: _____

Fulfillment Item Information: Required for all Programs. Please answer all questions.

Fulfillment Item Description: Total Number of Items Offered in this Program: _____

_____

Estimated # of Consumer Orders: _____ Initial Qty. Ordered from Supplier: _____

Anticipated Delivery Date of Fulfillment: ____/____/____ Item POS #:_____

Reorder Leadtime for this Item is: _____

Consumer Requirements: Required for all Programs. Please answer all questions.

Quantity of Pack UPC's for this Item _____ #/Amt. Required Is this Offer Limited? ☐ No Limit

Are UPCs Required? ☐ Yes _____ If Yes: ☐ 1 Per Person

☐ No _____ ☐ 1 Per Household

☐ Other - Please Explain

.s Postage and Handling to be Paid by Consumer? ☐ No ☐ Yes $ _____

Other Fulfillment Information: Required for all Programs.

Are other enclosures/messages to accompany the fulfillment item(s)? (i.e., Survey, Postage Paid Reply Card, Envelope)
☐ Yes (Describe requirements below) ☐ No

_____

_____

Are Thank You Cards to be Enclosed? ☐ No ☐ Yes. Use Cards with Brand ID

Anticipated Delivery Date of Materials: Date: ____/____/____

Coupon Data: Complete if applicable. The Coupon Basic Data Sheet must be completed and must accompany this request.

Are Coupons Required as Part of Fulfillment Bounceback?

☐ No ☐ Yes If Yes: UPC# _____ Qty _____

Value _____ Est. Redemp. _____% Est. Resp. _____%

2041883628

Source: https://www.industrydocuments.ucsf.edu/docs/xnxl0000

PHILIP MORRIS

PROMOTIONAL FULFILLMENT
INVENTORY REQUEST

FORM #3661
PM USA REV 11/93
Red Forms

SHIP TO:

Date of Request _____

_____

_____

_____

_____

PHONE NO. (required) _____

SPECIAL INSTRUCTIONS: _____

_____

_____

2 PREFERRED DELIVERY DATE _____
(Allow at least 5 days from date of request)

3 PURPOSE:
(Please state intended use for requested items)

_____

4 P.O.S. #	DESCRIPTION OF ITEM	QUANTITY REQUESTED

5 DEPARTMENT: _____ BUILDING: _____ FLOOR: _____

DEPARTMENT CHARGE CODE: _____

6 REQUESTED BY: _____ EXTENSION: _____

7 MONETARY APPROVAL: (Signature) _____

OVERNIGHT/AIR SHIPMENT REQUEST (Signature) _____
(Monetary Approval must be director level or higher for overnight air shipments)

Promotional Fulfillment Shipment Approval: _____

2041883629

For Fulfillment use only:

DISTRIBUTION: FULFILLMENT GROUP (WHITE) FULFILLMENT HOUSE (GREEN)
ACCOUNTING (BLUE) REQUESTOR (PINK)

Source: https://www.industrydocuments.ucsf.edu/docs/xnxl0000

[redacted]

2041883630

Source: https://www.industrydocuments.ucsf.edu/docs/xnxl0000

Philip Morris U.S.A. - Continuity Promotions

Functional Area: Telemarketing *Functional Responsibility:* Program Set-up & Implementation *Name:* Renee V.H. Simons *Page No.* 1

FUNCTIONAL IMPACT CHART

Inputs	*Source* →	My Job →	*Output*	*Distribution*
Description & Drop Date of Program	Brand or Fulfillment	Describe scope of functional responsibility: - Ensure that program is set-up with all aspects of the project in mind (800#, Fulfillment, Customer Service, Scripting, Training, Programming etc.) and that each Functional area understands what the other is doing & how it relates to telemarketing	Documentation detailing estimated call volume & budget	Brand/Finance
Choose Vendor	Neodata, Sitel, ATI > Depends on program requirements		E-mail or phone call advising of vendor	Brand/Fulfillment
Design Call Flow	K&A; AT&T		Call Flow Design Chart	TM Manager
Secure 800#	K&A holding existing numbers or AT&T		E-mail advising of 800#	Brand/Fulfillment
Review of vehicles using 800#	Brand /Fulfillment	Time needed to complete (in weeks): 1-1 1/2 months prior to program drop date	Recommended changes in writing for consumer clarity	Brand/Fulfillment
Actual samples of all POS, ads and incentives for training	Brand/Media/Fulfillment/ Purchasing		Training document for CSRs	CSRs/Brand/Fulfillment

2041883631

Source: https://www.industrydocuments.ucsf.edu/docs/xnxl0000

Philip Morris U.S.A. - Continuity Promotions

Functional Area: Telemarketing *Functional Responsibility:* Program Set-up & Implementation *Name:* Renee V.H. Simons *Page No.* 2

FUNCTIONAL IMPACT CHART

Inputs	*Source* →	My Job →	*Output*	*Distribution*
Fact sheet for all programs. (Even those without an 800#)	Brand	Describe scope of functional responsibility: - Ensure that program is set-up with all aspects of the project in mind (800#, Fulfillment, Customer Service, Scripting, Training, Programming etc.) and that each Functional area understands what the other is doing & how it relates to telemarketing	Training documentation for CSRs	CSRs/Fulfillment Consumer Affairs
Weekly status meetings	Each TM vendor/K&A/ Fulfillment		Review of any current issues, problem solving followed-up by weekly documentation	K&A/TM Manager
Test 800#'s	K&A & TM vendors		Phone call or E-mail advising status of 800#	TM Manager/K&A
Programming	TM vendors w/K&A & TM Manager		Documentation from TM vendors w/proposed budget for programming	K&A/TM Manager/Brand
Prepare scripts	K&A	Time needed to complete (in weeks): 1-1 1/2 months prior to program drop date	Written script for approval	TM Manager/Brand/ Fulfillment/Legal

2041883632

Source: https://www.industrydocuments.ucsf.edu/docs/xnxl0000

Philip Morris U.S.A. - Continuity Promotions

Functional Area: Telemarketing *Functional Responsibility:* Program Set-up & Implementation *Name:* Renee V.H. Simons *Page No.* 3

FUNCTIONAL IMPACT CHART

Inputs	*Source* →	My Job →	*Output*	*Distribution*
Data Inventory due to Fulfillment house	Fulfillment/Purchasing	Describe scope of functional responsibility: - Ensure that the program is running smoothly - Address all current issues - Provide all appropriate parties with reporting	Phone contact w/TM vendors to advise dates (or if expected delays)	TM Manager/K&A/CSRs
Monitor Calls	TM vendors/K&A		Weekly report re: results & recommendations for refresher training	TM Manager/K&A/TM vendors
Focus Groups	CSRs		Documentation re: what consumers are saying	Brand/K&A/Fulfillment
Call statistics - offered - answered - abandoned - ASA, etc.	TM Vendors through K&A		Daily report Weekly report	TM Manager Brand
Weekly status meetings w/individual vendors	TM Vendors /K&A	Time needed to complete (in weeks): On-going-weekly	Discussion of current issues & documentation of agreed upon action to be taken	TM Manager/K&A
Weekly status meetings with Fulfillment	Fulfillment/Purchasing		Discussion of current issues, action to be taken & documentation as appropriate	Brand/Fulfillment/K&A/ TM Vendors

2041883633

Source: https://www.industrydocuments.ucsf.edu/docs/xnxl0000

Philip Morris U.S.A. - Continuity Promotions

Functional Area: Telemarketing *Functional Responsibility: Program Set-up & Implementation* *Name: Renee V.H. Simons* *Page No. 4*

FUNCTIONAL IMPACT CHART

Inputs	*Source* →	My Job →	*Output*	*Distribution*
Revise scripts	K&A	Describe scope of functional responsibility: - Ensure that the program is running smoothly - Address all current issues - Provide all appropriate parties with reporting	Written script for approval	TM Manager/Brand/ Fulfillment/Legal
		Time needed to complete (in weeks): On-going-weekly		

2041883634

Source: https://www.industrydocuments.ucsf.edu/docs/xnxl0000

1-800 Number Process Flow

1) Brand decides to execute a program utilizing a 1-800 number

2) Brand advises Purchasing/Fulfillment of the program and need for a 1-800 number

3) Purchasing/Fulfillment chooses Fulfillment House and advises K&A that a 1-800 number is required. (More than one number may be required depending on the complexity of the program.)

4) 1-800 number secured and provided to the Purchasing/Fulfillment Group

5) Purchasing/Fulfillment advises K&A of the program specifics (e.g., circulation(s), drop date(s), media vehicle(s), etc.) that will contain the 1-800 number. **(1)**

6) Training materials are prepared and/or secured as needed. **(2)**

7) Training for Customer Service Reps is scheduled (usually one week prior to the drop date).

8) K&A conducts training with assistance from the Brand and Purchasing/Fulfillment Groups to review offer, media, etc. as well as the items being offered to consumers.

9) Telemarketing/K&A facility monitor calls on a daily basis to measure the quality of the calls. (PM Purchasing/Fulfillment Analysts generally monitor calls on a weekly basis.) **(3)**

10) Refresher Training is conducted as needed either one-on-one or as a group. **(4)**

11) Reports are provided to PM (individual Purchasing/Fulfillment Analysts) on a daily basis as to the call volume and content. **(5)**

12) Focus groups are conducted on a weekly basis (via conference call) to discuss any current issues.

(1) TM Manager should be advised immediately of any potential program start-up which will include a 1-800 number to ensure telemarketing facilities are aware of potential call volumes. A promotional calendar should be prepared to monitor all programs utilizing a 1-800 number.

(2) Training should be scheduled through the TM Manager so he/she may act as the liaison between Brand, Purchasing/Fulfillment, Telemarketing vendor, Corporate Affairs and any back-up facility.

(3) Calls should be monitored on a daily basis and no advance notice should be required. Software should be available so the TM Manager can monitor the actual Switch Reports for each facility.

(4) Refresher training should be scheduled by the TM Manager and administered in conjunction with K&A and the individual facilities.

(5) Reports must be modified to reflect the needs of all groups affected (Brand, Database, Corporate Affairs, Purchasing/Fulfillment). There should be one comprehensive report issued by Telemarketing that meets all the groups needs. (Separate reporting should not be required for each Brand.)

2041883635

Source: https://www.industrydocuments.ucsf.edu/docs/xnxl0000

2041883636

Source: https://www.industrydocuments.ucsf.edu/docs/xnxl0000

Philip Morris USA Continuity Promotions

Functional Area: *Consumer Satisfaction* *Functional Responsibility:* *Audit* *Name:* *Marla Antonoff* *Page No.* 1

FUNCTIONAL IMPACT CHART

Inputs	***Source*** →	***My Job*** →	***Output***	***Distribution***
Define # of proofs of purchase required	Operations	Describe scope of functional responsibility: Audit catalogue • delivery • CSR's pick and pack • shipping and handling • redemption		
Identify and order variety of combination of items	Purchasing		Review receipt of orders provide evaluation	Project task force
Monitor orders	800 # Neodata customer serv		Review customer service	Project task force
		Time needed to complete (in weeks): 10-12 weeks		

20418836 37

Source: https://www.industrydocuments.ucsf.edu/docs/xnxl0000

Philip Mo..s USA Continuity Promotions

Functional Area: *Consumer Satisfaction* *Functional Responsibility:* *Benchmarking* *Name:* *Marla Antonoff* *Page No.* 2

FUNCTIONAL IMPACT CHART

Inputs	***Source*** →	***My Job*** →	***Output***	***Distribution***
Identify and collect category catalogue activity	Field market checks, sales force	Describe scope of functional responsibility: On-going compilation review and evaluation of competitive and non-competitive catalogue activity	Presentation Boards of activity	All individuals involved in catalogue development and execution
Identity, collect and evaluate CPG activity	Review FSI's, magazines, retail checks		Evaluation of delivery, production and merchandise	
Identity, collect and evaluate catalogue activity	Review catalogues			
		Time needed to complete (in weeks): 8-16 weeks		

2041883638

Source: https://www.industrydocuments.ucsf.edu/docs/xnxl0000

Philip Morris USA Continuity Promotions

Functional Area: *Consumer Satisfaction* *Functional Responsibility:* *Research* *Name:* *Marla Antonoff* *Page No.* *3*

FUNCTIONAL IMPACT CHART

Inputs	***Source*** →	***My Job*** →	***Output***	***Distribution***
Prepare C. Sat brief	Research firms	Describe scope of functional responsibility: To provide on-going evaluation of consumer satisfaction levels and expectations and offer areas to initiate continuous	Proposals	Consumer services
Identity research agencies and brief	MRD Group			MRD
Prepare C. Sat quest	Research group		C. Sat questionnaire	Brand, MRD, fulfillment
		Time needed to complete (in weeks): 6 weeks		

2041883639

Source: https://www.industrydocuments.ucsf.edu/docs/xnxl0000

PHILIP MORRIS MCS AUDIT TRAIL ORDER LOG

NAME/ADDRESS	ITEMS	# OF MILES	S&H CHARGES	DATE SENT	STATUS	DATE RECEIVED	STATUS	NOTES
REDACTED	Barn Coat(L) Tee Black Dopp Kit Gear Bag	1,700 150 325 610 2,785	$10.00	18-May	Mailed in brown jiffy bag			
REDACTED	Denim Shirt Jean Jacket(L) Thermos Cookout Irons	390 800 525 370 2,090	$7.00	18-May	Mailed in brown jiffy bag			
REDACTED	Dartboard Cap-Red Barn Coat(L)	1,450 100 1,700 3,250	$10.00	18-May	Mailed in brown jiffy bag			
REDACTED	Leather. Tool Lighter Bandana	825 280 25 1,130	$5.00	18-May	Mailed in shoebox		Sent 5 times too many miles	Overage of miles returned 6/4
REDACTED	Gear Bag Bandana Bill Chill Dopp Kit	610 25 720 325 1,680	$7.00	18-May	Mailed in brown jiffy bag	Called 800# to advise of overage, said miles would not be return	Sent 5 times too many miles	Overage of miles returned 6/4
REDACTED	Denim Shirt(L) Bandana Tee Red Leather. Tools	390 25 150 825 1,390	$5.00	18-May	Mailed in shoebox			
REDACTED	Jean Jacket (s) Thermos Tee Blue	800 525 150 1,475	$5.00	9-Jun	Mailed in brown jiffy bag			Sent 75 less miles

20418836 40

R: REDACTED MATERIAL

Source: https://www.industrydocuments.ucsf.edu/docs/xnxl0000

PHILIP MORRIS MCS AUDIT TRAIL ORDER LOG

NAME/ADDRESS	ITEMS	# OF MILES	S&H CHARGES	DATE SENT	STATUS	DATE RECEIVED	STATUS	NOTES
REDACTED	Wallet Harp Lighter	175 300 280 755	$3.00	18-May	Mailed in shoebox			Sent perfectly straight cuts
REDACTED	Denim Shirt(M) Tee Black Cookout Iron	390 150 375 915	$3.00	20-May	Sent in personal envelope			Sent really bad cuts Sent in $5.00 too much for p&h
REDACTED	Barn Coat(L) Dopp Kit Tee Red	1,700 325 150 2,175	$7.00	9-Jun	Mailed in brown jiffy bag			
REDACTED	Swiss Army Cookout Irons Denim Shirt(L)	1,450 375 390 2,200	$7..00					
REDACTED	Jean Jacket(L) Denim Shirt(M) Gear Bag Cap-Red	800 390 610 100 1,900	$7.00	9-Jun	Mailed in brown jiffy bag			
REDACTED	Bill Chill Leather Tool Watch	720 825 1,450 2,795	$10.00					
REDACTED	Barn Coat(M) Army Watch Gear Bag Darts Bill Chill	1,700 1,450 610 1,450 720 5,930	$10.00					

2041883641

R: REDACTED MATERIAL

Source: https://www.industrydocuments.ucsf.edu/docs/xnxl0000

PHILIP MORRIS MCS AUDIT TRAIL ORDER LOG

NAME/ADDRESS	ITEMS	# OF MILES	S&H CHARGES	DATE SENT	STATUS	DATE RECEIVED	STATUS	NOTES
REDACTED	Leather Tool	825	$3.00	Order # 1 sent on 6/16				Send same order 5 times over 14 days Sent in manilla envelope
REDACTED	Tee Blue Jean Jacket(S) Swiss Army	150 800 1,450 2,400						
REDACTED	Barn Coat(M) Lighter Harp	1,700 280 300 2,250						Send two days after item above
REDACTED	Wallet Leather Tool Bandana Caps Red/Bla	175 825 25 200 1,225						Send 2 days after item above
REDACTED	Gear Bag Bill Chill Watch Barn Coat(S)	610 720 1,450 1,700 4,480						Send 3 days after item above

R: REDACTED MATERIAL

2041883642

Source: https://www.industrydocuments.ucsf.edu/docs/xnxl0000

PM BENCHMARKING PRODUCT/ITEM LOG

[illegible]	[illegible]	[illegible]	[illegible]	[illegible]	[illegible]	[illegible]	[illegible]	[illegible]	[illegible]	[illegible]
TYPE	ITEM	[illegible]	[illegible]	[illegible]	[illegible]	[illegible]	[illegible]	[illegible]	[illegible]	[illegible]
PACKAGE GOODS	LEVER SNUGGLE BEAR	$7 95	ORIGINAL COMPLETED CERTIFICATE 2 PROOFS FROM ANY	MAIL	FULFILLMENT HOUSE - YOUNG AME CORPORATION	8 Apr	16 May		ALLOW 8 10 WKS FOR DELIVERY	ORDER REJECTED AND RETURNED DUE TO NON-COMPLIANCE NOT USE ORIGINAL CASH RECEIPT
PACKAGE GOODS	FRIENDSHIP SOUR CREAM RECIPE BOOKLET PLUS 50 COUPON	$1 00	3 PROOFS FROM ANY	MAIL		8 Apr			ALLOW 6 WKS FOR DELIVERY	TRIED TO CALL TO FOLLOW UP NO TELEPHONE NUMBER LIS OFFER
PACKAGE GOODS	NABISCO FAMILY FAVORITES CO JAR OFFER	$11 99	2 PROOFS FROM 11 5OZ OR LARGER	MAIL	PRICE IS VERY SMALL ON ORDER F	[illegible]Apr	9 Jun	GOOD	ALLOW 12 WKS FOR DELIVERY	FULFILLMENT SERVICE IS FIRST FULFILLMENT MANAGEMENT CAME WITH BOUNCEBACK COUPON
PACKAGE GOODS	SUCCESS RICE BOOK OFFER	$2 00	1 PROOF FROM ANY	MAIL		8 Apr	8 May'	GOOD	DOESN'T SPECIFY	BOOK CAME WITH NO LETTER
PACKAGE GOODS	JELLO CUTTERS	FREE	CASH REGISTER RECEIPT 4 PROOFS FR ANY 2 FROM ANY LARGE	MAIL		8-Apr	17 Jun	GOOD	$1 25 POSTAGE & HANDLING 6 8 FOR DELIVERY	ON 8/8 CALLED 800# WAITED FOR FOUR MINUTES PERSON UP ORDER, NOT FOUND IN SYSTEM ADVISED THAT FULFILL CENTER WOULD BE NOTIFIED APOLOGIZED PROFUSELY
PACKAGE GOODS	JELLO TRAVEL SAVINGS	$3 00	VARIOUS COMBINATION OF PROOFS	MAIL	REQUESTED $200 IN TRAVEL SAVI A LOT OF PROOFS REQUIRED	8 Apr	8 Jun	GOOD	DOESN'T SPECIFY	1 800-21-JELLO # LISTED FOR QUESTIONS CALLED ON 5/8 SAID IT TAKES 6-8 WKS FOR CERTIFICATES PACKAGE CAME RECIPE BOOKLET
PACKAGE GOODS	M&M's WATCH	P &H $9 95	3 PROOFS OF ANY	MAIL		21-Apr	31 May	GOOD	ALLOW 8 10	ARRIVED WITH NO LETTER
PACKAGE GOODS	SURF SOCCER CARDS	FREE	ORIGINAL CASH REGISTER RECEIPT 1 OF ANY	MAIL		21-Apr			ALLOW 6 8	
PACKAGE GOODS	NESTLE T SHIRT OFFER	$8 95	TWO PROOFS OF PURCHASE ON 1 550 LARGER	MAIL	CHARGED $4 00 FOR SHIPPING AN HANDLING	9-May			ALLOW 4-6	CALLED 800# ON 6/13, REFERRED TO ANOTHER 800# REFE AGAIN TO ANOTHER 800#, ADVISED THAT LARGES RAN OUT NEW ORDER SHOULD ARRIVE IN TWO WKS
PACKAGE GOODS	TWININGS TEA CARR'S COOKIES TEA	FREE	1 PROOF OF TWINING TEA	MAIL		22 Apr			ALLOW 4-6	DID NOT RECEIVE ON TIME NO # LISTED TO CALL
CATALOG										
LL BEAN										
	ARCADIA JACKET	$89 00	N/A	PHONE	ON BACK ORDER FOR 5 WKS VERY APOLOGETIC	8-Apr	28 Apr	GOOD	$3 95 per 5-7 bus days	MOST REASONABLE POLICY
	T SHIRT	$12 00	N/A	PHONE	ORDER CONFIRMED RARELY BACK ORDR D ON T-SHIRTS	8 Apr	13 Apr	GOOD		800# AVAILABLE 24 HRS A DAY
	DENIM SHIRT	$33 00	N/A	PHONE	10 DAY BACK ORDER VERY POPUL ITEM	8-Apr	21 Apr	GOOD		RECEIVED ITEM CONFIRMATION AND MINI CATALOG
	GEAR BAG w/ Monogram	$94 00	N/A	PHONE	ORDER CONFIRMED	8 Apr	13 Apr	GOOD		

2041883643

Source: https://www.industrydocuments.ucsf.edu/docs/xnxl0000

PM BENCHMARKING PRODUCT/ITEM LOG

[illegible]	[illegible]	[illegible]	[illegible]	[illegible]	[illegible]	[illegible]	[illegible]	[illegible]	[illegible]	[illegible]
PACKAGE GOODS	LEVER SNUGGLE BEAR	$7 95	ORIGINAL COMPLETED CERTIFICATE 2 PROOFS ANY	MAIL	FULFILLMENT HOUSE YOUNG AMERICA CORPORATION	16 May		ALLOW 8-10 WKS FOR DELIVERY	ORDER REJECTED AND RETURNED DUE TO NON-COMPLIANCE NOT USE ORIGINAL CASH RECEIPT
PACKAGE GOODS	FRIENDSHIP SOUR CREAM R BOOKLET PLUS 50 COUPON	$1 00	3 PROOFS FROM ANY	MAIL		6 Apr		ALLOW 6 WKS FOR DELIVERY	TRIED TO CALL TO FOLLOW UP NO TELEPHONE NUMBER LIS OFFER
PACKAGE GOODS	NABISCO FAMILY FAVORITES COOKIE JAR OFFER	$11 99	2 PROOFS FROM 11 5OZ OR LARGER	MAIL	PRICE IS VERY SMALL ON ORDER FORM	8 Apr	9 Jun	GOOD	ALLOW 12 WKS FOR DELIVERY	FULFILLMENT SERVICE IS FIRST FULFILLMENT MANAGEMENT CAME WITH BOUNCEBACK COUPON
PACKAGE GOODS	SUCCESS RICE BOOK OFFER	$2 00	1 PROOF FROM ANY	MAIL		8 Apr	6 May	GOOD	DOESN'T SPECIFY	BOOK CAME WITH NO LETTER
PACKAGE GOODS	JELLO CUTTERS	FREE	CASH REGISTER RECEIPT 4 PROOFS FROM ANY FROM ANY LARGE	MAIL		5 Apr	17 Jun	GOOD	$1 25 POSTAGE & HANDLING 6-8 FOR DELIVERY	ON 6/8 CALLED 800#,WAITED FOR FOUR MINUTES, PERSON UP ORDER, NOT FOUND IN SYSTEM ADVISED THAT FULFILL CENTER WOULD BE NOTIFIED APOLOGIZED PROFUSELY
PACKAGE GOODS	JELLO TRAVEL SAVINGS	$3 00	VARIOUS COMBINATION OF PROOFS	MAIL	REQUESTED $200 IN TRAVEL SAVINGS A LOT OF PROOFS REQUIRED	8 Apr	6 Jun	GOOD	DOESN'T SPECIFY	1-800 21-JELLO # LISTED FOR QUESTIONS CALLED ON 5/6 SAID IT TAKES 6-8 WKS FOR CERTIFICATES PACKAGE CAME RECIPE BOOKLET
PACKAGE GOODS	M&M's WATCH	P &H $9 95	3 PROOFS OF ANY	MAIL		21 Apr	31-May	GOOD	ALLOW 8 10	ARRIVED WITH NO LETTER
PACKAGE GOODS	SURF SOCCER CARDS	FREE	ORIGINAL CASH REGISTER RECEIPT 1 PROOF	MAIL ANY		21-Apr			ALLOW 6-8	
PACKAGE GOODS	NESTLE T SHIRT OFFER	$9 95	TWO PROOFS OF PURCHASE ON 1 55OZ. OR LARGER	MAIL	CHARGED $4 00 FOR SHIPPING AND HANDLING	9 May			ALLOW 4-6	CALLED 800# ON 6/13, REFERRED TO ANOTHER 800#, REFE AGAIN TO ANOTHER 800# ADVISED THAT LARGES RAN OUT NEW ORDER SHOULD ARRIVE IN TWO WKS
PACKAGE GOODS	TWININGS TEA CARR'S COC FREE TEA	FREE	1 PROOF OF TWINING TEA	MAIL		22 Apr			ALLOW 4 6	DID NOT RECEIVE ON TIME NO # LISTED TO CALL
CATALOG										
LL BEAN										
	ARCADIA JACKET	$89 00	N/A	PHONE	ON BACK ORDER FOR 5 WKS VERY APOLOGETIC	8 Apr	28 Apr	GOOD	$3 95 per 5-7 bus days	MOST REASONABLE POLICY
	T-SHIRT	$12 00	N/A	PHONE	ORDER CONFIRMED RARELY BACK ORDR'D ON T-SHIRTS	8 Apr	13 Apr	GOOD		800# AVAILABLE, 24 HRS A DAY
	DENIM SHIRT	$33 00	N/A	PHONE	10 DAY BACK ORDER VERY POPULAR ITEM	8 Apr	21-Apr	GOOD		RECEIVED ITEM CONFIRMATION AND MINI CATALOG
	GEAR BAG - w/ Monogram	$94 00	N/A	PHONE	ORDER CONFIRMED	8 Apr	13-Apr	GOOD		

2041883644

Source: https://www.industrydocuments.ucsf.edu/docs/xnxl0000

PM BENCHMARKING PRODUCT/ITEM LOG

TYPE	ITEM	PRICE	DESCRIPTION	ORDER	DETAILS	DATE	STATUS	SHIP	QUALITY	NOTES
CATALOG										
HAMMACHER SCHLEMMER										
	KAYAK	$199 95	N/A	PHONE	ORDER CONFIRMED VERY COURTEOUS & RESPONSIVE	8 Apr	13-Apr	GOOD	SHIPPING IS C BY TOTAL ORDER MIN IS $4 95-$14 95	800# OPERATES 24 HRS A DAY
	ELECTRONIC DIARY	$79 95	N/A	PHONE	IN STOCK	8 Apr	13 Apr	GOOD	5 7 BUS DAYS	RECEIVED LETTERS OF CONFIRMATION ON EACH ITEM
	SWISS ARMY KNIFE	$99 95	N/A	PHONE	ON BACK ORDR FOR 2 WKS SHOULD BY 4/22	8 Apr	13 Apr	GOOD	SHIPPING IS $14 95	
CATALOG										
VICTORIA SECRET										
	TERRY CLOTH ROBE	$48 00	N/A	PHONE	ON BACK ORDER UNTIL 7/10 BACK ORDERS AR COMMON	20 Apr	3 May	GOOD	SHIPPING IS CALCULATED BY ITEM TOTAL MIN $3 95 $17 95	SPECIAL OFFER $25 OFF PURCHASE OF $75 OR MORE
	ADMIRAL BLOUSE	$25 00	N/A	PHONE	ON BACK ORDER UNTIL 5/5 (TWO WEEKS)	20 Apr	3 May	GOOD		PACKAGE WAS RECEIVED WITH ITEM CONFIRMATION AND M CATALOG
	WHITE CROPPED T SHIRT	$19 00	N/A	PHONE	ITEM SOLD OUT NOT RESTOCKING WOMAN REFE TO NEWER CATALOG	20-Apr				GOOD SELLING STRATEGY ON PHONE
CATALOG										
COCA COLA										
	WATER MATTRESS	$22 00	N/A	PHONE	IN STOCK WOMAN VERY HELPFUL	22 Apr	27-Apr	GOOD	SHIPPING IS CALCULATED AS ITEM TOTALS	CATALOG BEGAN 4/19 800# OPERATES 24 HRS DAILY
	NAPKIN HOLDER	$20 00	N/A	PHONE	ANNOUNCED SPECIALS IN-STOCK NO ITEMS ON ORDER YET	22-Apr	27 Apr	GOOD	$5 $11 ORDERS ARRIVE IN 3 5 BUSINESS DAYS	PACKAGE ARRIVED WITH CUSTOMER SATISFACTION QUEST

2041883645

Source: https://www.industrydocuments.ucsf.edu/docs/xnxl0000

PM BENCHMARKING PRODUCT/ITEM LOG

TYPE	ITEM	PRICE								
CATALOG										
CUTTY SARK	SQUALL SHIRT	$31 99	N/A	PHONE	SHIRT ON BACK ORDER FOR 4-6 WEEKS	3-May			SHIPPING IS CALCULATED	NEED TO CALL TO FOLLOW UP ON ORDER
	SWEATER	$35 99	N/A	PHONE	SHORTS AND SWEATER IN STOCK	3 May			BY ITEM TOTAL	
	SHORTS	$19 99	N/A	PHONE		3 May				
CATALOG										
CROWN ROYAL										
	TOWEL	$30 00	N/A	PHONE	IN-STOCK	22-Apr	4 May	GOOD	$3 00 PER ORDER	RECEIVED NEW CATALOG WITH ORDER BUT PROGRAM HAS
	ROBE	$4 00	N/A	PHONE	PURPLE SOLD OUT REPLACED WITH WHITE WHIC A FEW DOLLARS LESS	22 Apr	4 May	GOOD	CATALOG DNOT SPECIFY DELIVE TIME	ITEMS WERE SOLD OUT WHEN FIRST CALLED COMPUTERS DOWN OPERATORS SOUNDED AMATEURISH
	DENIM SHIRT	$30 00	ONE PROOF FOR $2 00 DISCOUNT	MAIL	SENT BY MAIL TO RECEIVE $2 DISCOUNT WITH	[illegible]pr	11-May	GOOD		8000 AVAILABLE 24 HRS A DAY $10 MIN FOR CHARGE OF
CATALOG										
CITIDOLLARS										
	CASIO POCKET TV	$148 95		PHONE		7 Apr	15 Apr	GOOD		
CATALOG										
QVC										
	SUNGLASSES	$10 95	N/A	PHONE	ANSWERED QUICKLY ITEM CON FIRMED FOR DEL 4/13	5-Apr	11 Apr	GOOD	SHIPPING DETERMINED BY ITEM WEIGHT	RECEIVED PROGRAM GUIDE
CATALOG										
COLUMBIA HOUSE CD CLUB										
	8 CD'S	$0 01	3 YEAR COMMITTMENT TO BUY 8 MORE CD'S PRICE	MAIL	RECEIVED NOTE ON 5/10 THAT MEMBERSHIP WA REJECTED CALLED TO FOLLOW UP ON 5/18	28 Apr	2 Jun		DOESN'T SPECIFY	RECEIVED NEW CATALOG ON 5/10, MAILED ORDER ON 5/20
COMPETITORS										
CAMEL										
CAMEL CASH	SUEDE JACKET(L)	$ 0	425 C NOTES	MAIL	ORDER SENT TO MARLA ANTONOFF	25 May			12 WEEKS FOR DELIVERY	REQUESTED VIP CARD
ORDER # 1	WATCH	$ 0	170 C NOTES	MAIL	ORDER FORM CONFUSING	25 May			NO SHIPPING CHARGES	SENT ORDER IN BROWN JIFFY BAG
	T SHIRT	$ 0	35 C NOTES	MAIL		25 May				
	T SHIRT	$ 0	45 C-NOTES	MAIL		25 May				
	TOWEL	$ 0	135 C NOTES	MAIL		25 May				

2041883646

Source: https://www.industrydocuments.ucsf.edu/docs/xnxl0000

PM BENCHMARKING PRODUCT/ITEM LOG

ORDER # 2	SUEDE JACKET (L)	$ 0	425 C NOTES	MAIL	ORDER SENT TO ALEX ALIKSANYAN	8 Jun			12 WEEKS FOR DELIVERY	SENT IN GREY ENVELOPE
[illegible]	[illegible]	[illegible]	[illegible]	[illegible]	[illegible]	[illegible]	[illegible]	[illegible]	[illegible]	[illegible]
CAMEL MOTORSPORTS										
	T SHIRT	$27 99	10 C-NOTES	MAIL	ORDER SENT TO ALEX ALIKSANYAN	8 Jun	10 Jun	GOOD	6 WEEKS FOR DELIVERY	SENT IN GREY ENVELOPE CAMEL CALLED ON 6/8 MISSING SIZE
	SLEEVLESS BUTTON SHIRT	$18 99	10 C NOTES	MAIL		8 Jun	10 Jun	GOOD		SENT FEDERAL EXPRESS

2041883647

Source: https://www.industrydocuments.ucsf.edu/docs/xnxl0000

PHILIP MORRIS USA INTER-OFFICE CORRESPONDENCE
120 PARK AVENUE, NEW YORK, NY 10017-5592

TO: Dennis Floam **DATE:** June 6, 1994

FROM: Marla J. Antonoff

SUBJECT: MCS Audit Trail Order Log

In an effort to ensure that we are continuing to meet the highest consumer satisfaction standards for both Marlboro Adventure Team and Marlboro Country Store, the consumer satisfaction group is conducting an internal audit of the order fulfillment process being handled by Neodata. A variety of parameters in our fulfillment process are being assessed.

Specifically, our objectives will be to assess:

1. Customer Service attitudes and competency.
2. Back Order management and timeliness.
3. The Order Tracking Process.

In order to accomplish these objectives, we have decided to elicit the aid of PM USA employees by asking them to act as consumers, sending in actual orders.

You have been pre-selected as one of our test consumers. Actual orders in your name, have been sent in which will be arriving at your home address. The attached sheet describes the items ordered and other particulars.

In an effort to expedite our findings, please complete the information on the attached sheet and bring in along with all of your unopened packages to my office on the 12th floor. We would appreciate if you could hold all merchandise unopened and attached log until last item is received.

We appreciate your assistance on this important project. As soon as the assignment is completed, we will share our findings.

P.S. Any FUN ideas you might have on an equitable distribution of the goodies, please include with your **completed** tracking form.

2041883648

Source: https://www.industrydocuments.ucsf.edu/docs/xnxl0000

PM USA EMPLOYEE ORDER LOG

Name: Dennis Floam

Items Ordered:	Description:	Date Received:
Jean Jacket (L)		
Denim Shirts (M)		
Gear Bag		
Cap-Red		

Please let us know of any other communication received:

Description:	Date Received:

Other Comments:

PLEASE SEND THIS COMPLETED FORM IN TO MARLA ANTONOFF AFTER
RECEIPT OF ALL ITEMS. THANK YOU FOR YOUR HELP.

2041883649

Source: https://www.industrydocuments.ucsf.edu/docs/xnxl0000

PHILIP MORRIS
BENCH MARKING
ORDER FORM DETAILS

MANUFACTURER	SHIPPING COST	DELIVERY TIME	SPECIAL FEATURES	LAYOUT	NOTES
Hammacher-Schlemmer	varies by item	5-7 business	gift wrap	clean and simple	Tax is required where there is
	Ranges from	days	available		stores or warehouses
	$4.95-14.95		800#-24 hours		On line with Compuserve
			express delivery		and Prodigy
L.L. Bean	$3.95 per order	2-5 business	800# available	clean and simple	Other catalogs are mentioned
	Federal Express	days	24 hours ordering		Size charts appear
			customer service		
Coca-Cola	Varies by	3-5 business	800# available	clean and simple	
	merchandise total	days	Fax available		
	Ranges from		24 hours		
	$5.00-$11.00				
Victoria Secret	Varies by	5-7 business	Gift wrap	Cluttered and small	
	merchandise total	days	800# available		
	Ranges from		24 hours		
	$3.95-$17.95				
Citi-Dollars	Varies by item	Up to 14 days	800# available	clean and simple	All orders are subject to routine
			M-F 9am-11pm		credit approval
			Sat. 9am-8pm		
			24 hour fax		
Crown Royal	$3.00 per order	Doesn't	800# available	Clean and simple	Sizing instructions are given
		specify	24 hours	Not enough lines	
			Orders by mail	on order form	
			entitiled to a $2.00		
			discount with one		
			upc		

2041883650

Source: https://www.industrydocuments.ucsf.edu/docs/xnxl0000

PHILIP MORRIS
BENCH MARKING
ORDER FORM DETAILS

MANUFACTURER	SHIPPING COST	DELIVERY TIME	SPECIAL FEATURES	LAYOUT	NOTES
Cutty Sark	Varies by	Doesn't	800# available	Clean and simple	
	merchadise total	specify	M-F 8am-8pm		
	Ranges from		Rush delivery		
	$2.95-$6.95		available- $9.00		
Camel Cash	No charge	12 weeks	800# available	Very difficult to	Offer expires 12/31/94
			Include b-day and	read	
			signature		
			No phone orders		
			accepted		
Malboro Miles	Varies by item	10-12 weeks	800# Customer	Clean and simple	Offer expires 12/31/94
	total. Ranges from		service, no phone		
	$2.00-$10.00		orders accepted		
Columbia House	8 CD's for $.01	Doesn't	Contractual	Very confusing	Sent in original order form,
		specify	commitment for		which was rejected for no
			6 CCD's over three		explainable reason
			years		

Source: https://www.industrydocuments.ucsf.edu/docs/xnxl0000

PHILIP MORRIS USA **CONSUMER MARKETING SERVICES**

Consumer Satisfaction Survey Briefing

2041883652

Source: https://www.industrydocuments.ucsf.edu/docs/xnxl0000

CONSUMER SATISFACTION SURVEY
BRIEFING

- MAT/MCS PROGRAM REVIEW
- FULFILLMENT/CONSUMER SATISFACTION ISSUES
- ASSIGNMENT OBJECTIVES
- PROPOSAL DUE DATES

2041883653

Source: https://www.industrydocuments.ucsf.edu/docs/xnxl0000

MARLBORO ADVENTURE TEAM

WHAT IS MAT?

The Marlboro Adventure Team is a fully integrated themed consumer promotion that builds on the brand's "Marlboro Country" platform with an overlay of promotional action and adventure.

- The program offered a fantasy adventure trip contest.
- A catalogue of adventure team gear FREE with proofs ("Miles")

  -The MAT program allowed consumers to collect and save their miles for FREE incentives.

- MAT provided an umbrella theme for retail, direct, advertising and visibility programs. This program was undoubtedly the largest consumer promotion program fielded in the US in terms of reach and response.

2041883654

Source: https://www.industrydocuments.ucsf.edu/docs/xnxl0000

MARLBORO COUNTRY STORE

WHAT IS COUNTRY STORE?

The Marlboro Country Store is a fully integrated, themed consumer promotion that builds more traditionally on the brand's "Marlboro country" platform. The program works well with the resurgence of western fashion and culture in the U.S. today.

Like MAT, Marlboro Country Store is a large scale continuity program that allows consumers to collect UPC's for free incentives. (There is no overlay of a trip contest)

Marlboro Country Store will provide a promotional umbrella for the brand's retail, direct, visibility, advertising, programs.

2041883655

Source: https://www.industrydocuments.ucsf.edu/docs/xnxl0000

CONSUMER SATISFACTION SURVEY

ASSIGNMENT OBJECTIVES

- Identify key drivers of consumer satisfaction

- Identify and determine levels of consumer satisfaction and dissatisfaction of overall MAT and MCS programs broken down into:

  -Service, Product, and Expectations

- Identify and evaluate "PONC"(price of non-conformance) costs associated with cons. disat; translation of cons. disat. into bottom line profit erosion. Define what additional revenues can be achieved as a result of continuous improvements(planning, inventory management, structure, call centers)

- Franchise expansion, retention and defection and $ associated with each

2041883656

Source: https://www.industrydocuments.ucsf.edu/docs/xnxl0000

RECOVERY PROCESS IMPACT

20418836S7

Source: https://www.industrydocuments.ucsf.edu/docs/xnxl0000

"SORRY" MARKETING

- Delivery Delays

- acknowledgment cards, letters, increased telecommunications

-complimentary t-shirts, inserts, postage, shipping and handling

-split shipment of orders

-increase system support

-cancellation of orders

-air shipment of re-order inventory

-defection of irate consumers?

-mamagement time

-lower loyalty

2041883658

Source: https://www.industrydocuments.ucsf.edu/docs/xnxl0000

CATALOGUE SATISFACTION

- Catalogue items

- value, design, utility, functionality, broad appeal, image extending

- catalogue merchandising

- Order form facility

- Communication Clarity

- Expectations

2041883659

Source: https://www.industrydocuments.ucsf.edu/docs/xnxl0000

EXPIRATION DATES

- MAT miles ------ MCS miles, UPC(miles) expiration dates

- Restrictions

- Catalogue expiration dates

- Expectations

2041883660

Source: https://www.industrydocuments.ucsf.edu/docs/xnxl0000

ABUSE VS. ENTHUSIASTS

- Items per person, items per household
- Pooling of miles
- Future guidelines
- Expectations

2041883661

Source: https://www.industrydocuments.ucsf.edu/docs/xnxl0000

UPC/MILES COLLECTION DEVICES

- Miles on UPC panel vs. Insert (c-Notes) or other advanced technologies

- Storage of miles
  - currently none provided
  - "lick and stick" books a la S&H greenstamp
  - other container options

2041883662

Source: https://www.industrydocuments.ucsf.edu/docs/xnxl0000

RELEVANCE OF CATALOGUE MARKETING IN THE CATEGORY

If catalogue programs were discontinued in the future how would this effect consumer purchase decision?

2041883663

Source: https://www.industrydocuments.ucsf.edu/docs/xnxl0000

REDEEMER SUBSETS

- Rec'd merchandise within 12 weeks
- Rec'd merchandise within 12-20 weeks
- Rec'd merchandise beyond 20 weeks
- Marlboro smokers
- competitive smokers
- Redeemed once
- Multiple redeemers

2041883664

Source: https://www.industrydocuments.ucsf.edu/docs/xnxl0000

2041883665

Source: https://www.industrydocuments.ucsf.edu/docs/xnxl0000

PHILIP MORRIS CONSUMER MAIL HANDLING PROCEDURES

CATEGORY	COLOR	DESCRIPTION	PROCEDURE	TIMING
LEGAL	RED (R)	Attorney General/Attorneys Better Business Bureau Media/Consumer Advocates Parent of underage Threat of lawsuit (Includes cc:'s to third parties)	Alert NY Consumer Affairs via phone; Overnight originals to NYCA w/ attachments and INR form; Keep logging system for tracking purposes	Route w/in 24 hours Resolve immediately
URGENT PROMOTION COMPLAINTS	DARK BLUE (DB)	Irate consumers	Route to Telemarketing Site for resolution--call first [TMS: retain letter & response indefinitely (accessible to NYCA) (Exception: if mail addressed to PM Executive or if unable to handle, route to NYCA)]	Route w/in 24 hours Resolve w/in 48 hours
URGENT CORPORATE	GREEN (G)	Immediate/permanent deletes Sensitive smokers' issues	Route to NYCA	Route w/in 24 hours Resolve w/in 48 hours
CIGARETTE PRODUCT RELATED	LIGHT BLUE (LB)	Cigarette quality complaints Product inquiries (e.g., T&N)	Route to Richmond Quality Assurance	Route w/in 48 hours Resolve w/in 48-72 hours
DATABASE ADMINISTRATION	WHITE (WH)	Add to database Change of Address Deceased Delete (reversible) Quitter/Non-Smoker	Handle on location (Exceptions: RQA route to NYCA for handling; Sitel and TransTech route to designated data entry supplier for handling)	Action w/in 5 bus. days
CORPORATE INQUIRIES	YELLOW (Y)	Annual Report requests Coupon requests Executive Mail Happy Mail Ideas Sales/Personnel/Shareholders Smokers' issues	Route to NYCA	Route w/in 5 bus. days Resolve w/in 5 bus. days
PROMOTIONAL INQUIRIES	ORANGE (O)	Actual order Catalog/order form request Order status Request for promo information	Route to TMS handling promotion	Route w/in 48 hours Resolve w/in 48-72 hours

2041883666

Source: https://www.industrydocuments.ucsf.edu/docs/xnxl0000

Chapter 10: White Mail Procedures

This Chapter describes information about and the procedures for:

- White Mail Processing
- White Mail Reporting
- White Mail Categories

Attachments to this chapter include:

- White Mail Handling Procedures Grid
- White Mail "Flowchart"
- Sample Consumer Correspondence
- Sample White Mail Report

2041883667

Source: https://www.industrydocuments.ucsf.edu/docs/xnxl0000

WHITE MAIL

White Mail can be defined as correspondence other than a typical response device (i.e., survey, order form, etc.) received.

Philip Morris considers consumer correspondence EXTREMELY important and has implemented the following procedures to ensure that it is handled efficiently.

PROCESSING GUIDELINES

Below are guidelines, that when followed, will help insure that consumer correspondence is handled efficiently:

- ALL pieces of white mail, that can easily be identified as such, should be opened the SAME DAY they are received, regardless of volume received. White mail can be easily identified if it is returned in an envelope other than the BRE that has been provided to the consumer, or, in the case of a premium item program, if it seems that no UPC's are enclosed.

- ALL pieces of white mail, regardless of whether they will be forwarded to a third party, will need to be date/time stamped upon opening. The information to be stamped (on the top right corner) should include the following:
    - Company Name
    - Date
    - Time

- ALL pieces of white mail that need to be forwarded to a third party will need to be) color coded (via a peel-off colored dot) and 2). The color code should be affixed to the upper right hand corner of the piece of mail. (All copies of the document should note the color code on the dot.) The "Action Taken" slip should be stapled to the upper left hand corner of the piece of mail. See Attachment A for an example.

  While "Action Taken" slips will be provided to each facility, it will be the responsibility of each supplier to purchase the colored peel-off dots. The corresponding color for each white mail category is shown on the "Handling Procedures" grid.

- ALL pieces of white mail that require forwarding should include the envelope in which the document was received, and any other related material.

- If available, copy the OCR code (16 digits) onto the document being forwarded.

- Multi-issue letters will require more than one action and should be handled per the procedures outlined for each category and in the hierarchy that has been instituted. For example, if a letter is received that contains questions about a particular product, but also is an "add to the mailing list" request, a survey should be sent to the consumer and the letter should be forwarded with an "Action Taken" slip to PM/Richmond.

2041883668

Source: https://www.industrydocuments.ucsf.edu/docs/xnxl0000

REPORTING OF WHITE MAIL

A separate White Mail Report must be issued for each program you are assigned. Reports should be mailed (via Regular Mail) so they are received by Philip Morris and LBCo. bi-monthly (every 1st and 3rd Monday). Copies of the White Mail reports should be retained until the program has completed.

There are two pages to the White Mail report:

PAGE 1
The first page details counts (for the specific time frame and cumulative) of white mail received by category. If you receive white mail that cannot fit into one of the prescribed categories, please J. Fernandez call to determine if a new category is necessary. Please do not add additional categories without consulting.

PAGE 2
The second page details the names of consumers received to date, categorized as having sent "Legal", "Urgent Promotion Complaint" or "Urgent Corporate" mail. Also included on the second page are the OCR codes for the consumers (if applicable), and dates the documents were sent to Philip Morris.

Each White Mail Report will need to be signed by a Supervisor verifying that all white mail has been sorted and counted correctly.

Please refer to Attachment B for examples.

The reports should be mailed (via Regular Mail) to:

All Sites (QA, TM Sites, Suppliers)		**Suppliers**
Philip Morris U.S.A. 120 Park Avenue New York, NY 10017	AND	Leo Burnett Co. 35 West Wacker Drive Chicago, IL 60601
Attn: Ms. Jean Fernandez		Attn: Ms. Marnie Pilgrim
TM Sites also **J. Restivo**		

2041883669

Source: https://www.industrydocuments.ucsf.edu/docs/xnxl0000

WHITE MAIL CATEGORY DESCRIPTIONS AND PROCEDURES:
We have categorized the different types of white mail received to aid in executing handling procedures. The categories are presented in a hierarchical order.

CATEGORIES

LEGAL
COLOR CODE: RED

- *Consumers writing to or copying the Better Business Bureau, Attorney General, or any attorney.*
- *Threat of lawsuit*
- *Any parents complaining that a minor in their household received a Philip Morris promotion in the mail.*
- *Any correspondence from a media group/consumer advocates group.*

Please note that consumers must provide their name and address in order to be categorized as this type of mail.

PROCEDURE:

1) CALL PM/NY CONSUMER AFFAIRS TO ALERT THEM THAT THEY SHOULD BE RECEIVING AN OVERNIGHT PACKAGE (Ms. Jean Fernandez (212) 880-3607).

2) SEND ORIGINAL DOCUMENT ~~WITH "ACTION TAKEN"~~ 'INR' FORM SLIP FOR OVERNIGHT DELIVERY TO PM/NY (ATTN: Ms. Jean Fernandez).

3) KEEP COPY OF DOCUMENT UNTIL NOTIFICATION OF RECEIPT IS RECEIVED; THEN SHRED COPY

4) DOCUMENT THE NECESSARY INFORMATION ON THE WHITE MAIL REPORT (PAGE 1 AND 2)

2041883670

Source: https://www.industrydocuments.ucsf.edu/docs/xnxl0000

WHITE MAIL ATEGORY DESCRIPTIONS AND PROCEDURES (CONT'D.):

URGENT PROMOTION COMPLAINT
COLOR CODE: DARK BLUE

- *Irate consumers writing about a particular promotion program. Letters are usually about having not received a fulfillment item, or are displeased with the program in general.*

Please note that consumers must provide their name and address in order to be categorized as this type of mail.

PROCEDURE:

1) CALL APPROPRIATE FULFILLMENT HOUSE TO ALERT THEM THAT THEY SHOULD BE RECEIVING AN OVERNIGHT PACKAGE (Contact Names Below)

2 SEND ORIGINAL DOCUMENT ~~WITH "ACTION TAKEN"~~ INR FORM SLIP FOR OVERNIGHT DELIVERY TO FULFILLMENT HOUSE

3) FULFILLMENT HOUSE TO RESOLVE WITHIN 48 HOURS AND RETAIN COPY OF DOCUMENT INDEFINITELY

*EXCEPTION: IF DOCUMENT IS ADDRESSED TO A PHILIP MORRIS EXECUTIVE, OR IF FULFILLMENT HOUSE CANNOT RESOLVE SITUATION, DOCUMENT SHOULD BE FORWARDED TO PM/NY (Ms. Jean Fernandez)

FULFILLMENT HOUSES

?

Marlboro
NEODATA
111 10th Street
Des Moines, IA 50309-4284

ATTN: Ms. Chris Warwick
(515) 237-4813

Other Premium/Discount Brands
CATALOG RESOURCES, INC.
155 Commerce Way
Suite C
Dover, DE 19901

ATTN: Mr. Jack Schenck
(302) 678-4800

MCS MAT Old New CRI

2041883671

Source: https://www.industrydocuments.ucsf.edu/docs/xnxl0000

WHITE MAIL CATEGORY DESCRIPTIONS AND PROCEDURES (CONT'D.):

URGENT CORPORATE
COLOR CODE: GREEN

- *Consumers displeased with smoking in general or sensitive smoker issues.*
- *Irate/upset consumers requesting to be immediately deleted from the "mailing list"/database.*

Please note that consumers must provide their name and address in order to be categorized as this type of mail.

PROCEDURE:
1) SEND ORIGINAL WITH "~~ACTION TAKEN~~" SLIP TO PM/CONSUMER AFFAIRS (Ms. Jean Fernandez) WITHIN 24 HOURS AFTER RECEIPT.

2) PM/NY TO MARK NO-MAIL STATUS ON CONSUMER'S DATABASE RECORD.

3) DOCUMENT THE NECESSARY INFORMATION ON THE WHITE MAIL REPORT (PAGE 1 AND 2)

2041883672

Source: https://www.industrydocuments.ucsf.edu/docs/xnxl0000

WHITE MAIL CATEGORY DESCRIPTIONS AND PROCEDURES (CONT'D.):

CIGARETTE PRODUCT-RELATED
COLOR CODE: LIGHT BLUE

- *Consumers displeased with the quality of their cigarettes.*
- *Consumers inquiring about a specific product 's tar and nicotine,* 100's, menthol, etc.

Please note that consumers must provide their name and address in order to be categorized as this type of mail.

PROCEDURE: 1) SEND ORIGINAL WITH "ACTION TAKEN" SLIP TO PM/RICHMOND (Contact Name Below) WITHIN 48 HOURS AFTER RECEIPT.

2) PM/RICHMOND TO CALL CONSUMERS AND/OR WRITE LETTER

CONTACT NAME
Philip Morris USA
P.O. Box 26603
Richmond, VA 23261
Mr. David Curle
(804) 274-3623

2041883673

Source: https://www.industrydocuments.ucsf.edu/docs/xnxl0000

WHITE MAIL CATEGORY DESCRIPTIONS AND PROCEDURES (CONT'D.):

DATABASE ADMINISTRATION
COLOR CODE: N/A (HANDLE ON LOCATION)

- *Consumers requesting to be added to the "mailing list"/database*
- *Consumers notifying Philip Morris that they have quit smoking, have never smoked, or that a household member is deceased and /or want to be deleted from the "mailing list"/database.*
- *Consumers requesting that their address be changed on the database*
- *Blank/Profane/Illegible*

Please note that consumers must provide their name and address in order to be categorized as this type of mail.

PROCEDURE: DATA ENTRY FACILITY TO HANDLE ON-SITE:

ADDS: GENERATE ADDRESS LABEL AND MAIL CONSUMER "WHITE MAIL SURVEY"

QUITTERS/NON-SMOKERS/DELETES/DECEASED: DATA ENTER PER KEYING INSTRUCTIONS (Data Type = W)

CHANGE OF ADDRESS: DATA ENTER PER KEYING INSTRUCTIONS (Data Type = A)

BLANKS/PROFANE/ILLEGIBLE: COUNT AND SHRED

DOCUMENT COUNTS OF ALL CATEGORIES ON WHITE MAIL REPORT

? TH
All Sites

2041883674

Source: https://www.industrydocuments.ucsf.edu/docs/xnxl0000

WHITE MAIL CATEGORY DESCRIPTIONS AND PROCEDURES (CONT'D.):

CORPORATE INQUIRIES
COLOR CODE: YELLOW

- *Consumers requesting coupons, annual reports, other PM Corporate items*
- *Unsolicited ideas from consumers*
- *Smokers' rights groups/advocates*
- *Letters regarding sales personnel, retailers or shareholders*
- *Executive mail*
- *"Happy Mail"*

Please note that consumers must provide their name and address in order to be categorized as this type of mail.

PROCEDURE:
1) SEND ORIGINAL WITH "ACTION TAKEN" SLIP TO PM/NY CONSUMERS AFFAIRS (Ms. Jean Fernandez) WITHIN 5 BUSINESS DAYS

2) PM/NY TO SEND LETTER TO CONSUMER (if applicable) WITHIN 5 BUSINESS DAYS

2041883675

Source: https://www.industrydocuments.ucsf.edu/docs/xnxl0000

PROMOTIC INQUIRIES
COLOR COI ORANGE

- *Consumers requesting specific program promotions, order forms, catalogs*
- *Consumers requesting an order status or actually sending in an order*

Please note that consumers must provide their name and address in order to be categorized as this type of mail.

PROCEDURE: 1) SEND ORIGINAL WITH "ACTION TAKEN" SLIP TO FULFILLMENT HOUSE WITHIN 5 BUSINESS DAYS

2) FULFILLMENT HOUSE TO RESOLVE WITHIN ~~5 BUSINESS DAYS~~ CALL 1st or write u/in 48-72 hrs.

FULFILLMENT HOUSES

Marlboro
NEODATA
111 10th Street
Des Moines, IA 50309-4284

ATTN: Ms. Chris Warwick
(515) 237-4813

Other Premium/Discount Brands
CATALOG RESOURCES, INC.
155 Commerce Way
Suite C
Dover, DE 19901

ATTN: Mr. Jack Schenck
(302) 678-4800

MCS HIST OLD NEW CRI

2041883676

Source: https://www.industrydocuments.ucsf.edu/docs/xnxl0000

ATTACHMENT A - SAMPLE CONSUMER CORRESPONDENCE

2041883677

Source: https://www.industrydocuments.ucsf.edu/docs/xnxl0000

ATTACHMENT B - SAMPLE WHITE MAIL REPORT

WHITE MAIL REPORT

DATE:
SUPPLIER NAME:
PROGRAM NAME:

CATEGORY	TOTAL COUNT FOR PERIOD ENDING: MAY 15, 1994	CUMULATIVE COUNT
LEGAL		
URGENT PROMOTION COMPLAINT		
URGENT CORPORATE		
CIGARETTE PRODUCT RELATED		
DATABASE ADMINISTRATION		
CORPORATE INQUIRIES		
PROMOTIONAL INQUIRIES		
BLANKS		
PROFANE		
ILLEGIBLE		

TM Sites must do 3rd report w/ Breakdown.

TOTAL LETTERS RECEIVED TO DATE*:

---

*TOTAL MAY NOT AGREE WITH CUMULATIVE COUNTS DUE TO MULTI-ISSUE LETTERS

Supervisor Approval

2041883678

Source: https://www.industrydocuments.ucsf.edu/docs/xnxl0000

Changes to ATS

Per your instruction, the Slip will be changed to contain only the following information:

FROM:
Company Name _____
Contact Name _____
Address _____
Phone _____

ACTION TAKEN

Costs

The attached estimate ($4,598.00) covers costs to typeset, produce keylines, print and ship to the various sites. Please review, sign and forward to your accounting department.

2041883679

Source: https://www.industrydocuments.ucsf.edu/docs/xnxl0000

CONSUMER COMPLAINT -- Item(s) not Received

Consumer Name: _____

Status of the order:

Specific Item(s)	Order Entry Date	Ship Label Date	Expected Delivery Date	Replace Date (if any)	Back Order? Yes or No	Date Delay Letter Generated

20418836 80

This form to be stapled to "Legal Letters (red)" referring to promotions.

Source: https://www.industrydocuments.ucsf.edu/docs/xnxl0000

PHILIP MORRIS

Thank you for your interest in our brand promotions. From time to time Philip Morris mails special, unadvertised gift offers, coupons and free cigarettes to selected smokers, 21 or older, on our Preferred Smokers mailing list.

If you'd like to be considered for offers in the future, take a moment to complete the survey below so we can better match offers to your smoking preferences. Then sign where indicated, fill in your birth date and mail the bottom portion.

The sooner we hear from you, the sooner you could be included in upcoming offers.

Philip Morris U.S.A.
Customer Service

Detach and mail bottom portion.

Yes, put me on the Preferred Smokers list.

☐ Female ☐ Male

☐ Ms. ☐ Mrs. ☐ Mr. _____

Address _____ Apt. # _____

City _____ State _____ ZIP _____

Phone Number (_____) _____

By responding to this survey and signing below, I certify I am a smoker 21 years of age or older. I am also willing to receive free cigarettes and branded incentive items in the mail subject to applicable state and federal law.

X _____ _____/_____/_____
Signature (required) Birth Date (required)

Take a moment to tell us about your smoking preferences.

1. What is your regular brand of cigarettes-that is, the brand you smoke most often?
brand: _____

2. Is your regular brand ..? (Check one.)
☐ Regular/King Size ☐ 100's ☐ 120's

3. Is your regular brand ..? (Check one.)
☐ Menthol ☐ Non-Menthol

4. Is your regular brand.. ? (Check one.)
☐ Filter ☐ Non-Filter

5. Is your regular brand...? (Check one.)
☐ Lowest/Low Tar ☐ Ultra/Extra Low Tar
☐ Light/Mild ☐ Medium ☐ Full Flavor

6. Do you usually buy it by the...? (Check one.)
☐ Pack ☐ Carton ☐ Both Ways

7. How long have you smoked this brand?
☐ Less than 1 year ☐ 1 to 2 years
☐ 2 to 3 years ☐ 3 to 5 years ☐ Over 5 yrs.

8. What, if any, was your previous brand?
brand: _____

9. The next time you go to the store, if your regular brand were not available, what would you do? (Check one.)
☐ Go to another store to buy my regular brand.
☐ Buy another type or length of my regular brand.
☐ Wait until the store has my regular brand.
☐ Buy a different brand entirely.

10. Which of the following statements best describes the way you use cigarette coupons? (Check one.)
☐ I use almost any cigarette coupon I get.
☐ I occasionally use coupons for cigarettes, even if they are not for my regular brand.
☐ I only use coupons if they are for my regular brand.
☐ I never use coupons to buy cigarettes.

11. If your regular brand were not available, which of the following brands would you consider buying? (Check all that apply.)

☐ Alpine	☐ GPC	☐ Pyramid
☐ Basic	☐ Kent	☐ Raleigh Extra
☐ Benson & Hedges	☐ Kool	☐ Salem
	☐ Magna	☐ Sterling
☐ Best Buy	☐ Marlboro	☐ Store Brand/ Generic
☐ Best Value	☐ Merit	
☐ Bristol	☐ Misty	☐ Supermkts
☐ Bucks	☐ Monarch	☐ True
☐ Cambridge	☐ Montclair	☐ Vantage
☐ Camel	☐ More	☐ Viceroy
☐ Capri	☐ Newport	☐ Virginia Slims
☐ Carlton	☐ Now	
☐ Doral	☐ Parliament	☐ Winston
☐ None	☐ Other _____ brand	

12. Please list all the brands of cigarettes you smoked at least one pack of in the past two weeks. How many packs did you smoke of each brand? (Use as many lines as you need. Write in exact number of packs for each brand below. Note: 1 carton = 10 packs.)

Brand Name	# of Packs

13. Where do you usually buy your cigarettes? (Check one.)
☐ Supermarket Chain
☐ Neighborhood Grocery
☐ Convenience/Gas
☐ Drug Store/Pharmacy
☐ Discount Store

14. How often do you use special in-store cigarette offers, such as a free gift with purchase, a 2-for-1, or special prices?

	Frequently	Occasionally	Never
...k for special ...s for my regular brand...	☐	☐	☐
I take advantage of special offers for brands other than my regular brand...	☐	☐	☐

15. Which of the following best describes you? (Check one.)
☐ White ☐ African American ☐ Hispanic
☐ Asian ☐ American Indian
☐ Other _____

16. Are there other smokers in your household 21 years of age or older? Please print full names, birth dates and regular brands.

First Name _____ M.I. _____ Last Name _____
Birth Date _____ Regular Brand _____
First Name _____ M.I. _____ Last Name _____
Birth Date _____ Regular Brand _____

Members have to read before smoking.

2041883681

Source: https://www.industrydocuments.ucsf.edu/docs/xnxl0000

NO POSTAGE NECESSARY IF MAILED IN THE UNITED STATES

BUSINESS REPLY MAIL
FIRST CLASS MAIL PERMIT NO 2157 MARIETTA, GA

POSTAGE WILL BE PAID BY ADDRESSEE

PHILIP MORRIS U.S.A.
PO BOX 100385
MARIETTA GA 30065-9950

P.O. Box 66310
London, KY 40742

2041883682

PHILIP MORRIS

Source: https://www.industrydocuments.ucsf.edu/docs/xnxl0000

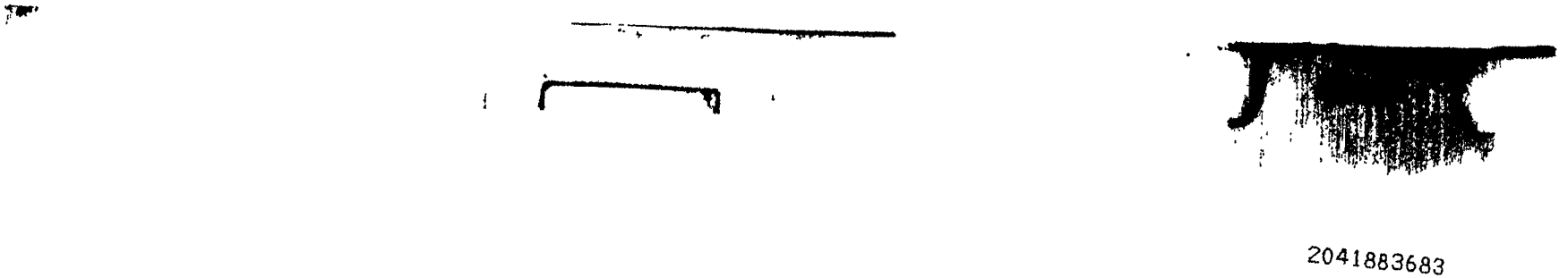

2041883683

Source: https://www.industrydocuments.ucsf.edu/docs/xnxl0000

PHILIP MORRIS USA INTEROFFICE CORRESPONDENCE
120 PARK AVENUE, NEW YORK, N.Y. 10017

TO: Distribution **DATE:** April 14, 1994

FROM: Marla J. Antonoff

SUBJECT: MCS KEY CONTACT LIST

Attached is the PM NYO MCS Key Contact list. If there are any questions, direction or status requests in any of these areas, it is requested that the "resident expert" in that area be contacted (or the alternate) to avoid duplication of efforts and minimize inaccurate information being dispersed in the marketing organization.

MS/mi
MS94-8

Distribution
K. Bunte
J. Eibon
J. Mansmann
J. McDaniels
K. McMahon
E. Moore
G. Murphy
N. Parmet
R. Potts
S. Piskor
J. Restivo
J. Royall
P. Sica
R. Simons
J. Spector
J. Trojanowski
J. Vander Putten
A. von Germeten
R. Whalen
T. Young

cc: N. Lund
J. Morgan
R. Roper

2041883684

Source: https://www.industrydocuments.ucsf.edu/docs/xnxl0000

MARLBORO COUNTRY STORE

KEY POINT TEAM CONTACT

RESPONSIBILITY	CONTACT	PHONE
Retail/Media **Prog. Develop & Communic Budget**	**Nancy Parmet**	**x2216**
	Steve Piskor	x4003
Direct Mail **Prog. Develop & Communic Budget**	**Anne vonGermeten**	**x3326**
	Steve Piskor	x4003
Forecasting	**Roy Whalen**	**x3892**
	Paula Sica	x3676
Legal	**Ginny Murphy**	**x3666**
Systems	**Reggie Potts**	**x3193**
	Jim Royall	x5004
Sales	**Jack Mansmann**	**x3342**
	Nancy Parmet	x2216
Retailer Rewards	**Tracy Young**	**x3732**
	Nancy Parmet	x2216

2041883685

Source: https://www.industrydocuments.ucsf.edu/docs/xnxl0000

Inventory **Incoming Flow,** **Status of Inventory**	**Elisa Moore**	**x3082**
	Ken Bunte	x3447
Fulfillment **Order Processing,** **Pick & Pack Status**	**Kathy McMahon**	**x3847**
	John Trojanowski	x3360
Database **Names, LB coordination,** **Consumer Affairs loop,** **"no mails"**	**Jeanne Eibon**	**x3491**
	Jim Vander Putten	x2740
Telemarketing **a) Operations**	**Jeanine Restivo**	**x2735**
	Renee Simons	x3282
b) Scripts	**Jeanine Restivo**	**x2735**
	Renee Simons	x3282
c) 800 #	**Jeanine Restivo**	**x2735**
	Marla Antonoff	x3911
White Mail **a) Issues, Product**	**Janice McDaniels**	**x3751**
	Jim Spector	x3585
b) Promotional	**Jeanine Restivo**	**x2735**
	Marla Antonoff	x3911
Consumer Satisfaction **Benchmarking**	**Marla Antonoff**	**x3911**
	Renee Simons	x3282

2041883686

Source: https://www.industrydocuments.ucsf.edu/docs/xnxl0000